Sensei Technical Manual

R32 Monobloc heat pump

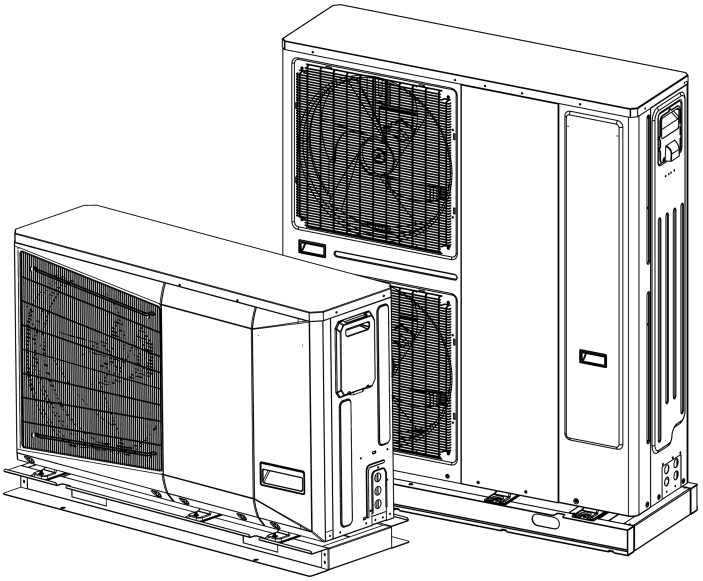

1. General Information 2
1.1. General presentation 2
1.2. Capacity range 4
1.3. Features of heat pump 4
1.4. System design and selection 7
1.5. Typical application 8
2. Engineering Data 10
2.1. Specification 10
2.2. Dimension 13
2.3. Piping diagram 15
2.4. Capacity table 17
2.5. Operating limits 87
2.6. Hydronic performance 89
2.7. Sound level 91
2.8. Accessory 93
3. Installation and Field Setting 94
3.1. Safety 94
3.2. Installation 100
3.3. Water pipework 105
3.4. Electrical wiring 110
3.5. DIP switch setting 116
3.6. Water pump 118
3.7. User interface 121
3.8. Operating parameter 130
3.9. Error code table 135

1. General Information

1.1.General presentation

1) System schematic

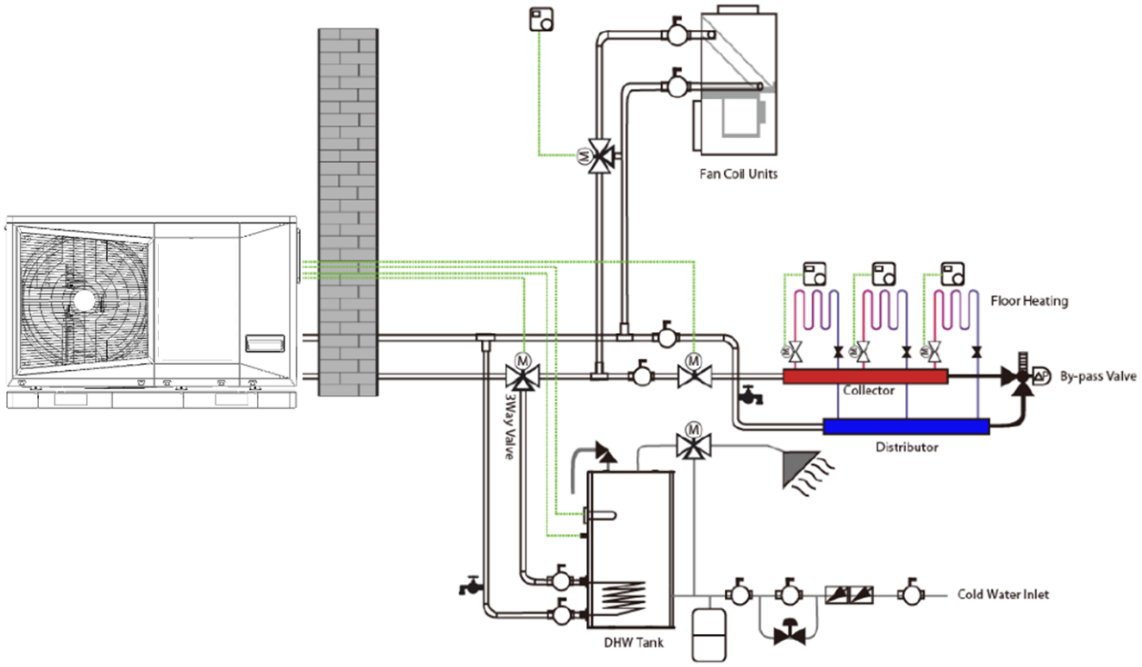

Picture 1-1-1

Monobloc heat pump is an integrated air to water heat pump system which is one-stop solution for space heating, space cooling and domestic hot water. The outdoor heat pump system extracts heat from the outdoor air and transfers this heat through refrigerant piping to the plate heat exchanger in the hydronic system. The heated water in the hydronic system circulates to low temperature heat emitters (floor heating loops or low temperature radiators) to provide space heating, and to the domestic hot water tank to provide domestic hot water. The 4-way valve in the outdoor unit can reverse the refrigerant cycle so that the hydronic system can provide chilled water for cooling using fan coil units.

The heating capacity of heat pumps decreases with ambient temperature dropping. Heat pump can be equipped with a backup electric heater or external heat source to provide additional heating capacity for use during extremely cold weather when the heat pump capacity is insufficient. The backup electric heater or external heat source also serve as a backup in case of heat pump malfunction and for anti-freeze protection of the outside water piping in winter.

2) System configuration

Monobloc heat pump can be configured to run with the electric heater either enabled or disabled and can also be used in conjunction with an auxiliary heat source such as a boiler.

The chosen configuration affects the size of heat pump that is required. Three typical configurations are described below.

Configuration 1: Heat pump only

- The heat pump covers the required capacity and no extra heating capacity is necessary.
- Requires selection of larger capacity heat pump and implies higher initial investment.
- Ideal for new construction in projects where energy efficiency is paramount.

Configuration 2: Heat pump with electric heater

- Heat pump covers the required capacity until the ambient temperature drops below the point at which the heat pump is able to provide sufficient capacity. When the ambient temperature is below this equilibrium point, the backup electric heater supplies the required additional heating capacity.
- Best balance between initial investment and running costs, results in lowest lifecycle cost.
- Ideal for new construction.

Configuration 3: Heat pump with external heat source

- Heat pump covers the required capacity until the ambient temperature drops below the point at which the heat pump is able to provide sufficient capacity. When the ambient temperature is below this equilibrium point, depending on the system settings, either the auxiliary heat source supplies the required additional heating capacity or the heat pump does not run and the auxiliary heat source covers the required capacity.
- Enables selection of lower capacity heat pump.
- Ideal for refurbishments and upgrades or high electric bill cost area.

Configuration 4: Heat pump with electric heater and external heat source

- Heat pump covers the required capacity until the ambient temperature drops below the point at which the heat pump is able to provide sufficient capacity. When the ambient temperature is below this equilibrium point, depending on the system settings, either the auxiliary heat source and electric heater supplies the required additional heating capacity or the heat pump does not run and the auxiliary heat source covers the required capacity.
- Enables selection of lower capacity heat pump.
- Ideal for extreme cold area

1.2.Capacity range

The capacity of the monobloc includes 4kW-16kW as the below table:

Table 1-2-1

Capacity/kW	4	6	8	10	12	14	16
Power supply	220-240V/1N/50Hz				220-240V/1N/50Hz 380-415V/1N/50Hz		

Note: The capacity from 4-10kW only has 1-phase; while the 12-16kW has both 1- phase and 3-phase.

1.3.Features of heat pump

1) Environment refrigerant

- The monobloc heat pump is used of R32 which friendly refrigerant to the environment with GWP 675. It can reduce the volume charge comparing to the R410a and has higher efficiency to match the Europe market regular.

Picture 1-3-1

2) High efficiency

- The monobloc heat pump is reached the high efficiency A+++ level@W35.

- DC inverter compressor with high efficiency
- DC motor to achieve the Eco design
- Low-pressure drop grill and high air flow fan blade to achieve better performance
- High efficiency BPHE and inner grooved copper pipe to enhance the heat exchange
- EXV and inverter water pump to precise control the refrigerant and water flow rate
- Refrigerant cooling technique to cool down the IPM board to provide a better condition of compressor

Picture 1-3-2

3) Integrated design

4) The Monobloc heat pump is built-in hydraulic kit with inverter pump, which is benefit to installation to saving time.

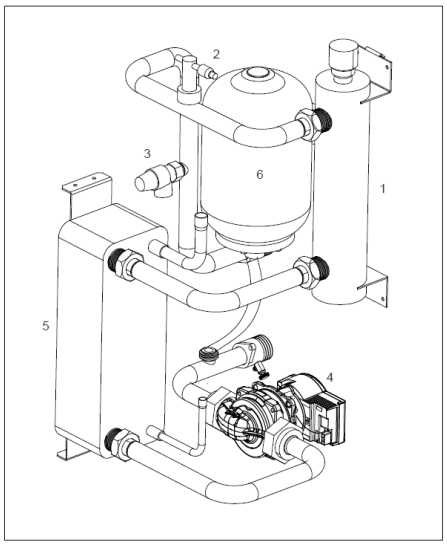

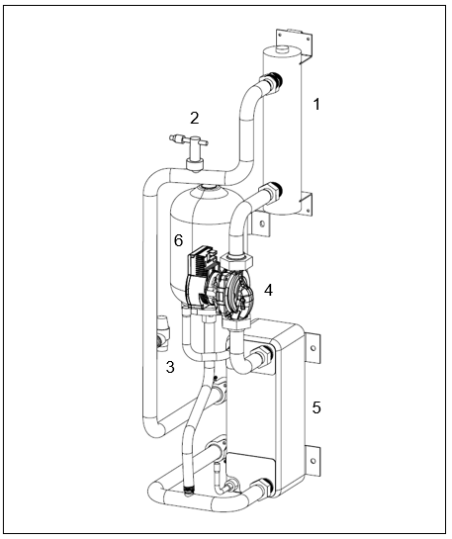

Picture 1-3-3

Legend:

1- 3kw electrical heater component
2- Water flow switch
3- Safety valve
4- Inverter pump
5- BPHE
6- Expansion vessel

5) Refrigerant cooling technique

- Thanks to the refrigerant cooling technique, the compressor can run in more stable condition.

- Good performance with enhanced refrigerant cooling solution
- Intelligent refrigerant control technology to protect PCB
- Quick action speed to make the main PCB working at suitable temperature range
- High reliability

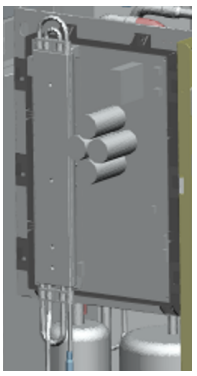

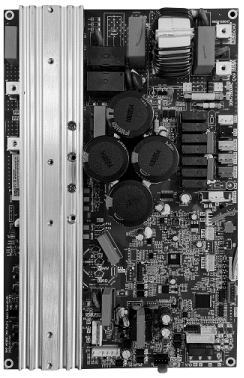

Picture 1-3-4

6) Night mode control

For the Monobloc heat pump, it has the noise control to achieve the quiet environment at the night. The aim of this function is to reduce the noise emitted by the heat pump during the night. When night mode is configurated, the unit will limit its max. compressor speed within 76Hz and fan speed within W6.

Picture 1-3-5

7) External heat source control

Oil or gas boiler external heat source is available, achieve higher water temperature in cold condition.

8) Back-up function

The aim of the backup function is to heat the water loop in case the heat pump capacity is not sufficient to heat the water in the low ambient temperature or failure. The backup control includes inner electrical heaters of main water loop, DHW electrical heaters in DHW tank, gas boiler. These works as booster simultaneously with heat pump or as backup alone while heat pump is stopped. They are activated according to outdoor ambient temperature, compressor running time and temperature difference between water setpoint and actually water temperature.

9) Built inside multi Safety components

The Monobloc heat is built-in multi safety components to protect the system in safety way.

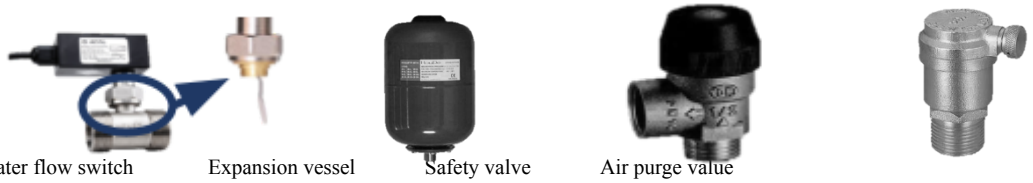

Water flow switch Expansion vessel Safety valve Air purge value

Picture 1-3-6

10) Multi type of controller

In order to match the multiple application scenarios, the Monobloc heat can select user interface, Modbus, or dry contact to control the system. It is more flexible and friendly to 3rd part control such as smart home application.

1.4.System design and selection

The procedure of the system design and unit selection:

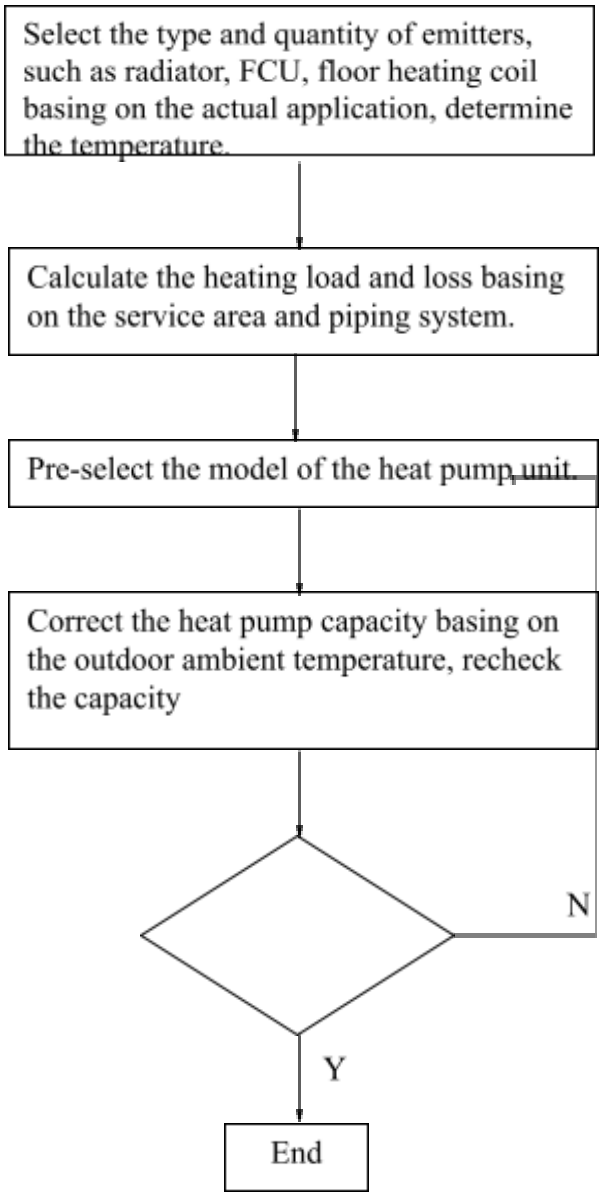

Note:

- If the required water temperatures of the heat emitters are not all the same, the heat pump's outlet water temperature setting should be set at the highest of the heat emitter required water temperatures.
- If the outdoor unit selection is to be based on total heating load and total cooling load, select Mono units which satisfy not only the total heating load requirements but also the total cooling load requirements.

1.5.Typical application

a. Application 1: space heating or cooling only

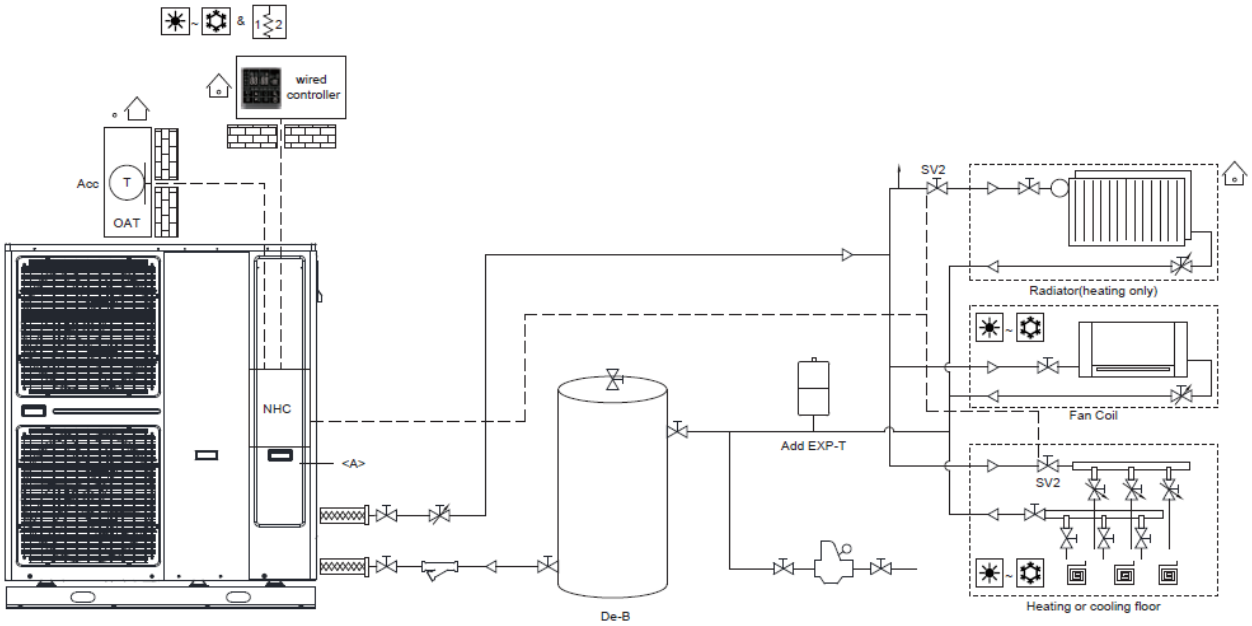

Picture 1-5-1

- In this application, the heat pump is only used to space heating or cooling.
- The unit is operating according to the setting of WUI, and the space heating is controlled basing its thermostat to ON/OFF the water circuit valve to cool or heat the room.

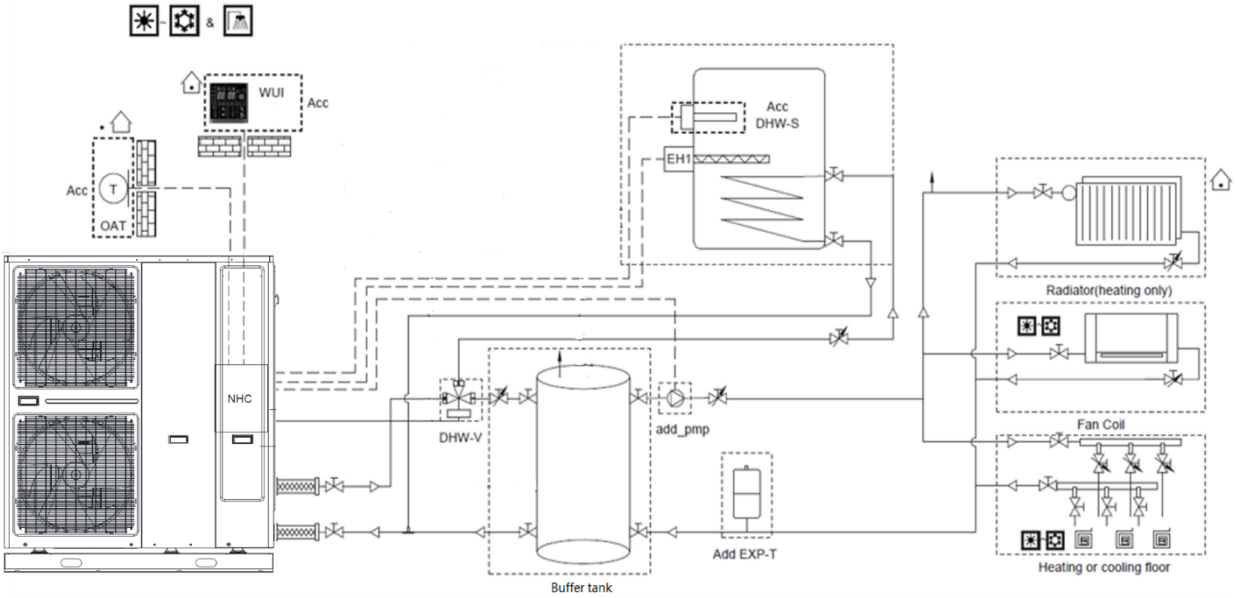

b. Application 2: space heating or cooling with DHW

Picture 1-5-2

- In this application, the heat pump is used to space heating or cooling and DHW.
- The unit is operating according to the setting of WUI, and the space heating is controlled basing its thermostat to ON/OFF the water circuit valve to cool or heat the room.
- DHW is proceeding basing on the time schedule or priority setting, and DHW valve will turn on under the control of heat pump unit

c. Application 3: external heat source apply

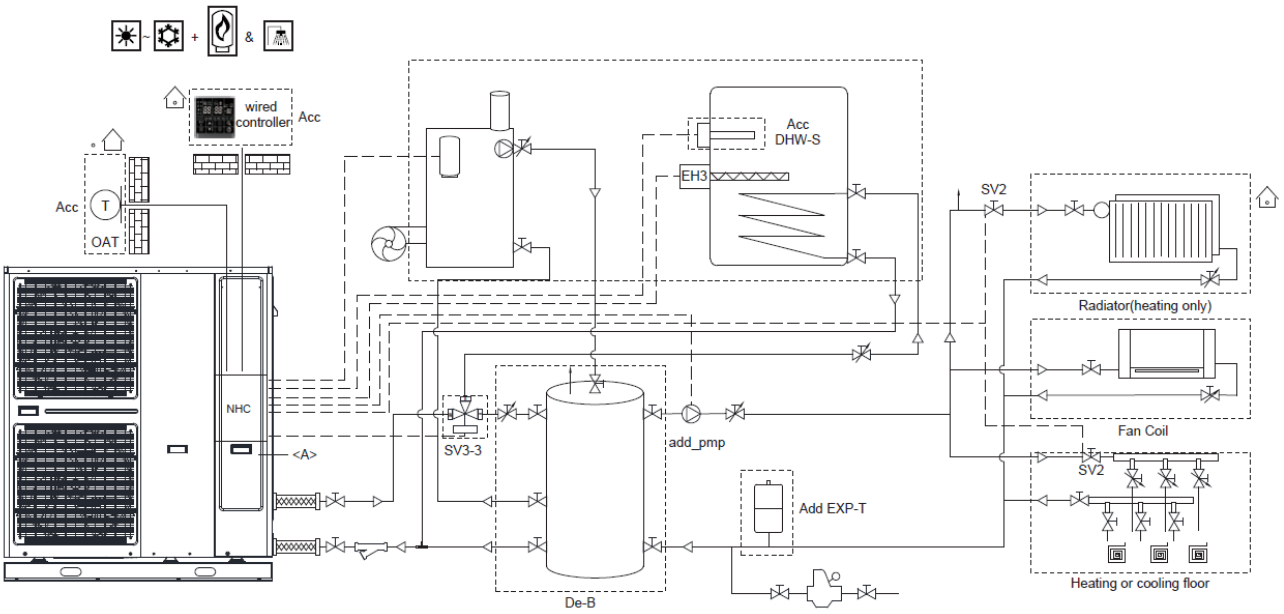

Picture 1-5-3

- In this application, the heat pump is used to space heating or cooling and DHW with gas boiler as booster or backup.
- The unit is operating according to the setting of WUI, and the space heating is controlled basing its thermostat to ON/OFF the water circuit valve to cool or heat the room.
- DHW is proceeding basing on the time schedule or priority setting, and DHW valve will turn on under the control of heat pump unit.
- Gas boiler would operate to heat the buffer tank water under the control of heat pump unit in case of the insufficient heat in extreme cold condition.

2. Engineering Data

2.1.Specification

Model			4	6	8	10	12	14	16
Performance									
Heating performances	**A+7°C; W30/35°C**								
	Heating capacity	kW	4.00	6.00	8.00	10.00	12.00	14.00	16.00
	COP (>4.5)		4.75	4.45	4.70	4.45	4.75	4.65	4.60
	A+2°C; W30/35°C								
	Heating capacity	kW	4.00	5.70	7.80	10.00	12.00	13.70	14.50
	COP (>3.5)		3.50	3.25	3.40	3.35	3.40	3.40	3.30
	A-7°C; W30/35°C								
	Heating capacity	kW	3.80	5.80	7.80	8.80	11.80	12.30	13.30
	COP (>2.7)		2.83	2.72	2.70	2.70	2.83	2.78	2.70
	A+7°C; W40/45°C								
	Heating capacity	kW	4.00	6.00	8.00	10.00	12.00	14.00	16.00
	COP (>3.6)		3.50	3.45	3.60	3.50	3.55	3.55	3.50
	A+7°C; W47/55°C								
	Heating capacity	kW	4.00	5.80	7.70	9.50	11.50	12.00	13.50
	COP (>2.9)		2.59	2.70	2.85	2.68	2.85	2.75	2.70
	A+2°C; W47/55°C								
	Heating capacity	kW	4.00	6.00	8.00	9.50	11.00	12.00	13.50
	COP		2.20	2.12	2.30	2.25	2.45	2.40	2.35
	A-7°C; W47/55°C								
	Heating capacity	kW	3.50	5.00	7.00	8.00	10.00	10.50	11.50
	COP		1.76	1.74	1.95	1.91	2.05	2.00	1.95
	A+7°C; W35°C （ErP-average）								
	Prated-NET		4.00	6.05	8.09	9.73	11.94	14.03	14.79
	SCOP-NET		4.73	4.75	4.90	4.98	4.91	4.94	4.78
	ηs 30/35-NET	%	186%	187%	193%	196%	193%	195%	188%
	Efficiency class 30/35		A+++	A+++	A+++	A+++	A+++	A+++	A+++
	A+7°C; W55°C （ErP-average）								
	Prated-NET		4.01	5.59	7.61	9.09	11.96	11.99	13.06
	SCOP-NET		3.22	3.25	3.36	3.41	3.39	3.42	3.36
	ηs 47/55-NET	%	126%	127%	131%	134%	133%	134%	131%
	Efficiency class 47/55		A++	A++	A++	A++	A++	A++	A++
Cooling performances	**A+35°C; W23/18°C**								
	Cooling capacity	kW	4.00	5.50	7.00	9.00	11.00	13.50	14.50
	EER (>3.8)		3.85	4.00	4.40	4.00	4.00	3.90	3.80
	SEER		6.45	6.39	6.80	6.25	6.60	6.37	6.14
	ηs 23/18		255%	253%	270%	247%	261%	252%	243%
	A+35°C; W12/7°								
	Cooling capacity	kW	4.00	5.00	6.50	8.00	10.50	12.00	14.00
	EER (>3.1)		2.85	2.75	2.90	3.00	2.75	2.70	2.65
	SEER		4.52	4.51	4.79	4.89	5.04	5.05	5.06
	ηs 12/7		178%	177%	189%	193%	199%	199%	199%

Physical data									
Sound levels	Standard unit								
	Sound power level (2)	dB(A)	61	64	65	66	69	69	70
	Sound pressure level (3)	dB(A)	50	53	54	55	56	56	58
Dimensions	Length	mm	1335	1335	1335	1335	1302	1302	1302
	Width	mm	475	475	475	475	465	465	465
	Height	mm	875	875	875	875	1517	1517	1517
	Package	mm	1420*535*1045				1364*518*1690		
Weight (1)	Standard unit	kg	109	109	120	126	165.5	167.7	167.7
	Package	kg	125	125	135.5	142.1	182.2	184.4	184.4
Compressors	Compressor type		DC Twin-rotary						
	Compressor qty		1						
Refrigerant	type		R32						
	Charge (1)	kg	1	1.1	1.6	1.8	2.2	2.6	2.6
Condenser	Copper		Grooved copper tubes,						
	Fin type		Hydrophilic aluminum foil						
Fans	Fan type		Axial type						
	Fan quantity		1	1	1	1	2	2	2
	Rated total air flow	m3/h	3200	3600	4200	4200	7300	7300	7300
	Rated speed	rpm	630	730	860	860	860	860	860
Evaporator	type		Brazed plate heat exchanger						
	Water volume	L	0.62	0.62	1.08	1.08	1.45	1.45	1.45
Hydraulic module			Circulator, relief valve, paddle flow switch, expansion tank						
	Circulator		Centrifugal pump (variable speed)						
	Expansion tank volume	L	5	5	5	5	5	5	5
	Auxiliary electrical heater	kW	3	3	3	3	3	3	3
	Max. water-side operating pressure with hydraulic module (4)	kPa	90	90	90	90	90	90	90
Water connections	Inlet diameter (MPT GAS)	inch	1	1	1	1	1.25	1.25	1.25
	Outlet diameter (MPT GAS)	inch	1	1	1	1	1.25	1.25	1.25
Ambient temperature range	Cooling	℃	-5~50						
	Heating	℃	-25~43						
	DHW	℃	-25~43						
Water outlet temperature range	Cooling	℃	5~25						
	Heating	℃	25~62						
	DHW	℃	40~62						

(1) Values are guidelines only. Refer to the unit nameplate.
(2) Declared dualnumber noise emission values in accordance with ISO 4871 (with an associated uncertainty of +/-2dB(A)). Measured in accordance with ISO 9614-1.
(3) Declared dualnumber noise emission values in accordance with EN12102-1 (with an associated uncertainty of+/-2dB(A)). For information, calculated from the sound power level Lw(A).
(4) Min. water-side operating pressure with variable speed hydraulic module is 40 kPa.

2.2.Dimension

The Monobloc has two sizes that the 4-10kW share the same size with single fan design and the 12-16kW share the same size with double fans design as below pictures.

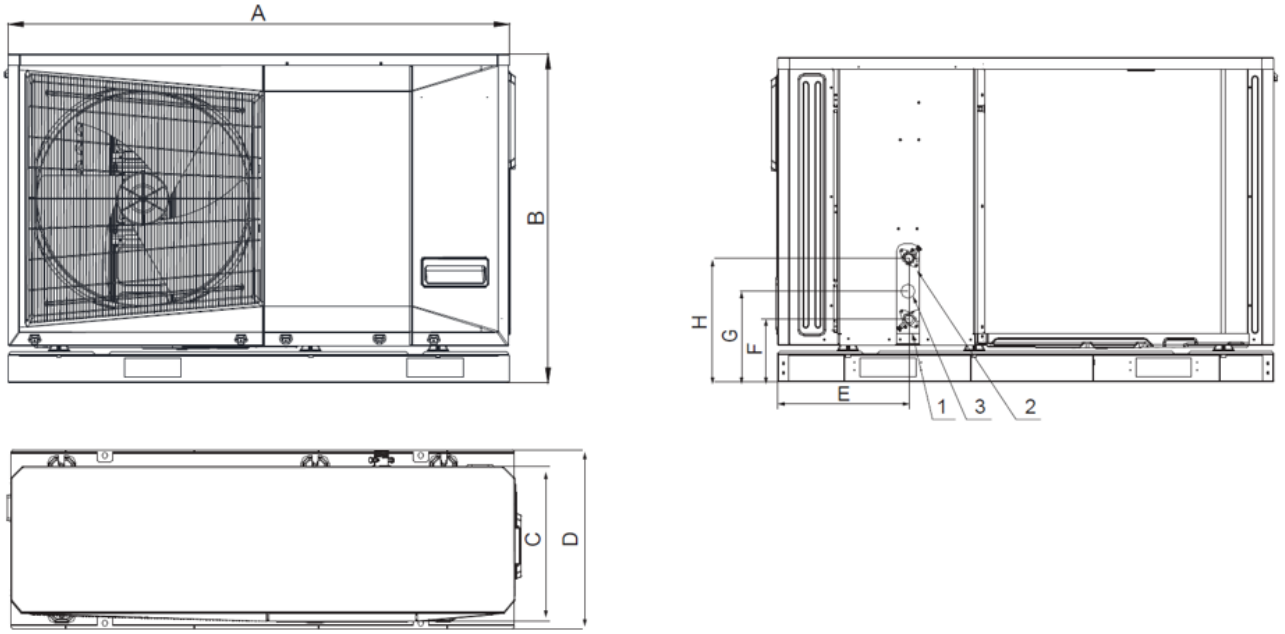

Picture 2-2-1

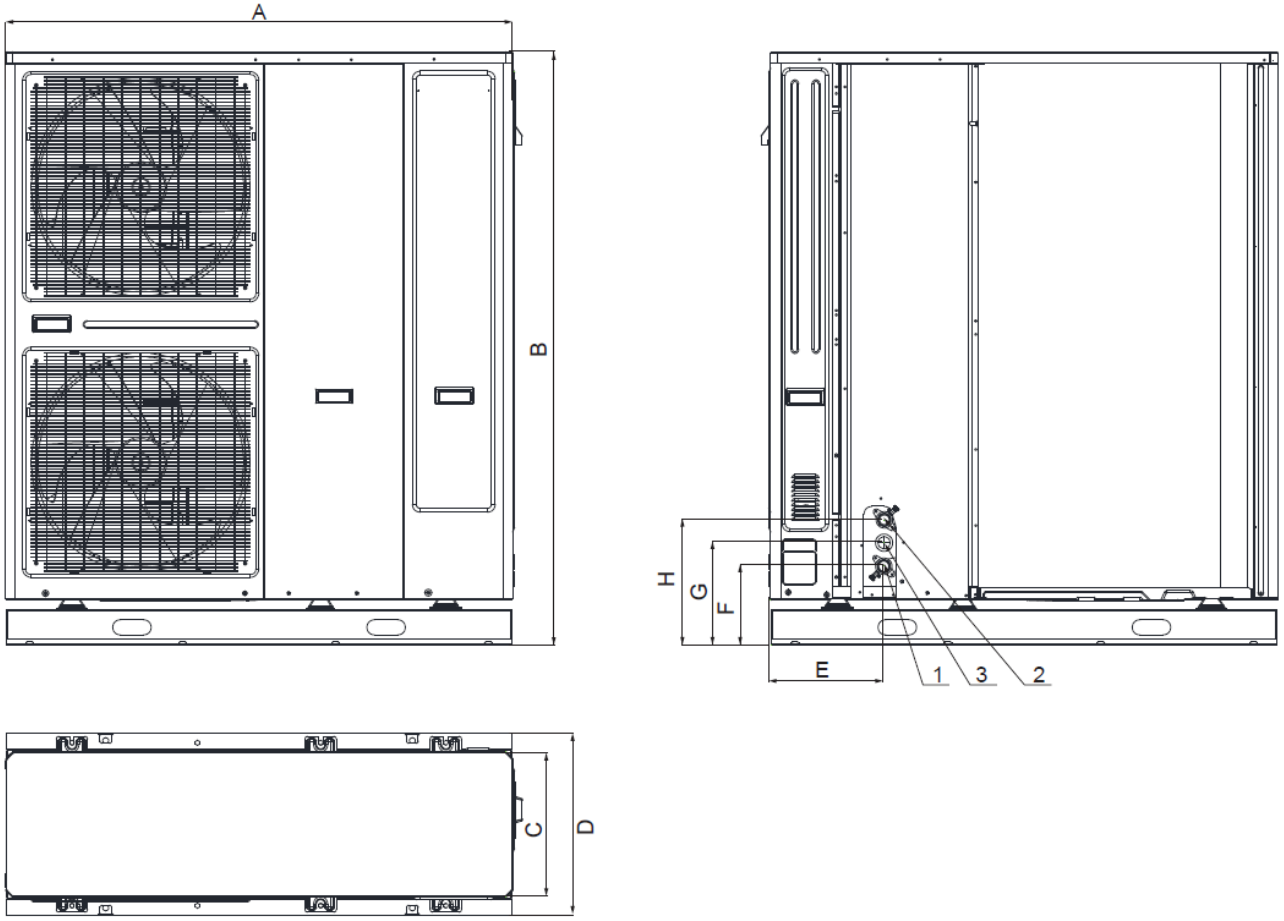

Picture 2-2-2

Table 2-2-1

Model	A	B	C	D	E	F	G	H

4-10kW	1335	875	410	475	353	170	244	334
12-16kW	1302	1517	370	465	289	201	262	332

2.3.Piping diagram

The Monobloc heat pump unit has total 2 cases, each case share the similar system design and piping layout, refer to below for details.

Piping diagram of 4-10kW

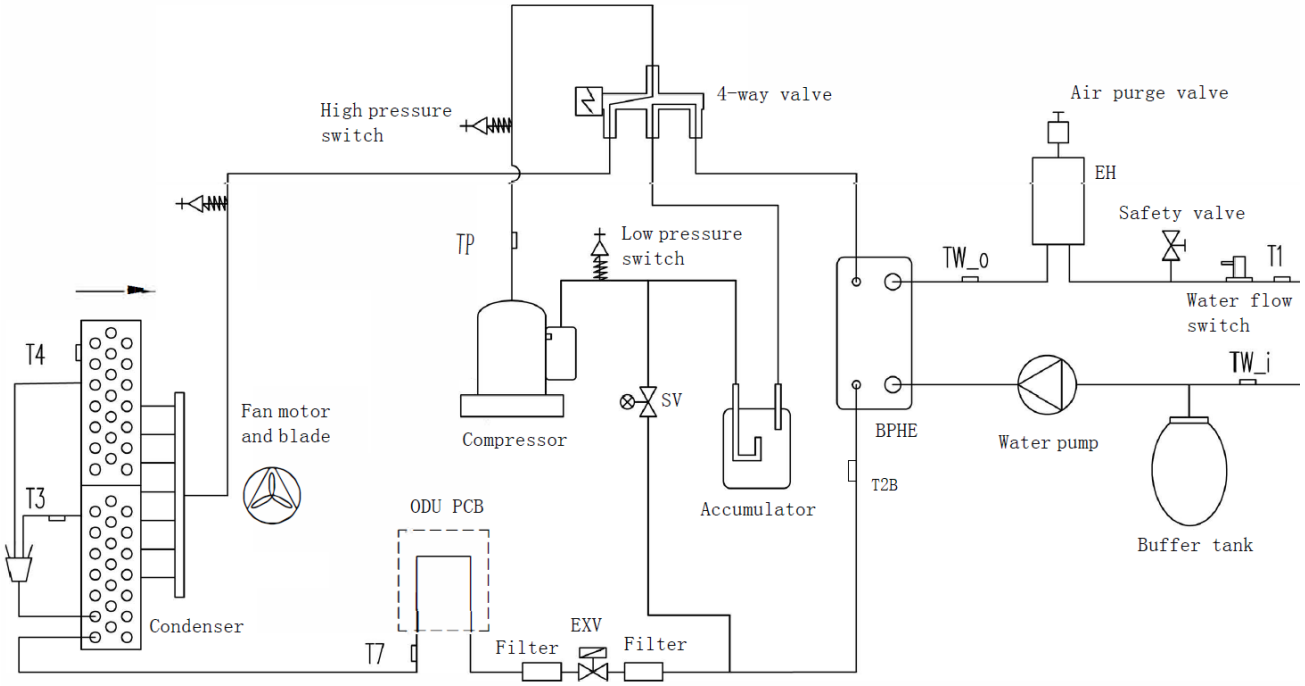

Picture 2-3-1

Piping diagram of 12-16kW

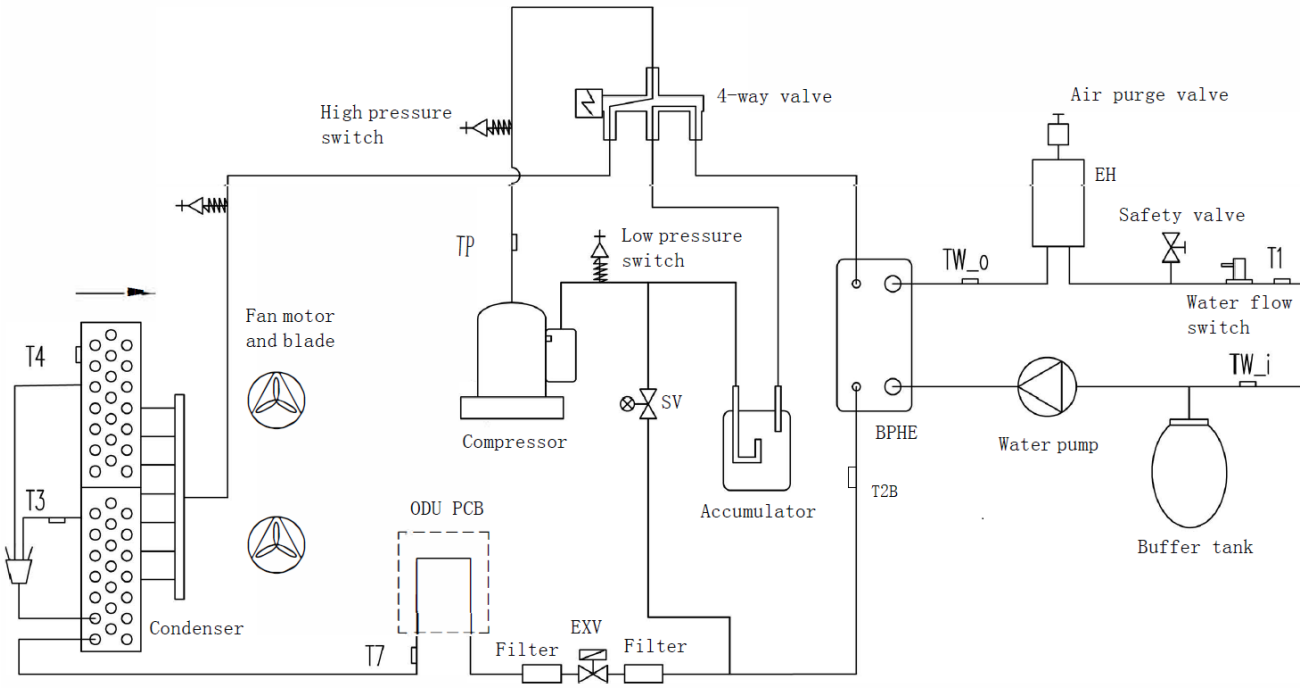

Picture 2-3-2

Acronym

T1: Leaving water sensor after electrical heater;

Tw-i: Entering water sensor

Tw-o: Leaving water sensor after BPHE
T2B: Refrigerant temp. of BPHE
T3: Refrigerant temperature of condenser
T4: Outdoor ambient temperature
TP: Discharged temperature
T7: PCB refrigerant cooling pipe temperature
BPHE: Brazed plate heat exchanger
EXV: Electronic expansion valve
SV: Solenoid valve

Key components

1. Accumulator:

Stores liquid refrigerant and oil to protect compressor from liquid hammering.

2. Electronic expansion valve (EXV):

Controls refrigerant flow and reduces refrigerant pressure.

3. Four-way valve:

Controls refrigerant flow direction. Closed in cooling mode and open in heating mode. When closed, the air side heat exchanger functions as a condenser and water side heat exchanger functions as an evaporator; when open, the air side heat exchanger functions as an evaporator and water side heat exchanger function as a condenser.

4. High-pressure and low-pressure switches:

Regulate refrigerant system pressure. When refrigerant system pressure rises above the upper limit or falls below the lower limit, the high-pressure switch or low-pressure switch turns off, stopping the compressor.

5. Air purge valve:

Automatically removes air from the water circuit.

6. Safety valve:

Prevents excessive water pressure by opening at 6 bar and discharging water from the water circuit.

7. Buffer tank:

Balances water system pressure.

8. Water flow switch:

Detects water flow rate to protect compressor and water pump in the event of insufficient water flow.

9. Backup heater:

Provides additional heating capacity when the heating capacity of the heat pump is insufficient due to very low outdoor temperature. Also protects the external water piping from freezing.

10. Water pump:

Circulates water in the water circuit.

2.4.Capacity table

1) Full load

Model: 4kW

Heating

Nominal heating capacity table:

OAT	LWT											
	30			35			40			45		
	HC	PI	COP	HC	PI	COP	HC	PI	COP	HC	PI	COP
-25/-	2.45	1.51	1.62	2.38	1.60	1.49	2.27	1.73	1.31	2.21	1.85	1.19
-20/-	3.16	1.44	2.19	3.01	1.53	1.97	2.97	1.64	1.81	2.93	1.80	1.63
-15/-	3.47	1.39	2.50	3.40	1.47	2.31	3.35	1.60	2.09	3.27	1.75	1.87
-10/-	3.88	1.31	2.96	3.81	1.43	2.66	3.74	1.53	2.44	3.58	1.70	2.11
-7/-8	4.02	1.24	3.24	3.96	1.39	2.85	3.91	1.46	2.68	3.76	1.63	2.31
2/1	4.08	1.05	3.89	4.03	1.15	3.49	4.01	1.21	3.31	3.99	1.34	2.98
7/6	4.12	0.80	5.15	4.05	0.84	4.81	4.02	1.02	3.94	4.01	1.15	3.49
15/12	4.21	0.78	5.40	4.10	0.81	5.06	4.07	0.96	4.24	4.04	1.09	3.71
20/15	4.29	0.75	5.72	4.18	0.77	5.43	4.14	0.89	4.65	4.10	0.98	4.18
25/18	4.40	0.69	6.38	4.34	0.71	6.11	4.28	0.81	5.28	4.17	0.90	4.63
35/24	4.56	0.62	7.35	4.47	0.66	6.77	4.35	0.74	5.88	4.26	0.83	5.13
OAT	LWT											
	50			55			60			63		
	HC	PI	COP	HC	PI	COP	HC	PI	COP	HC	PI	COP
-25/-	2.17	2.05	1.06									
-20/-	2.84	2.00	1.42	2.50	2.31	1.08						
-15/-	3.08	1.98	1.56	2.97	2.23	1.33	2.56	2.30	1.11			
-10/-	3.43	1.92	1.79	3.36	2.11	1.59	2.67	2.19	1.22			
-7/-8	3.62	1.86	1.95	3.50	1.99	1.76	2.78	2.03	1.37			
2/1	3.98	1.61	2.47	3.96	1.80	2.20	2.93	1.84	1.59			
7/6	3.99	1.35	2.96	3.98	1.54	2.59	3.10	1.63	1.90			
15/12	4.02	1.18	3.41	4.00	1.38	2.90	3.31	1.40	2.36	3.03	1.50	2.02
20/15	4.07	1.07	3.80	4.03	1.16	3.47	3.49	1.27	2.75	3.12	1.44	2.17
25/18	4.11	0.98	4.19	4.07	1.05	3.88	3.60	1.15	3.13			
35/24	4.16	0.89	4.67	4.10	0.97	4.23	3.87	1.08	3.58			

Note:
Nominal heating capacity and power input are included defrost cycle.
OAT: Outdoor ambient temperature
LWT: Leaving water temperature
HC: Heating capacity
PI: Power input

Average heating capacity table:

OAT	LWT											
	30			35			40			45		
	HC	PI	COP	HC	PI	COP	HC	PI	COP	HC	PI	COP
-25/-	2.67	1.77	1.51	2.54	1.88	1.36	2.48	2.03	1.22	2.49	2.17	1.15
-20/-	3.28	1.69	1.94	3.12	1.79	1.74	3.08	1.92	1.60	3.04	2.11	1.44
-15/-	3.60	1.63	2.21	3.53	1.72	2.04	3.47	1.88	1.85	3.39	2.05	1.65
-10/-	4.02	1.54	2.62	3.95	1.68	2.35	3.88	1.79	2.16	3.71	1.99	1.86
-7/-8	4.17	1.45	2.87	4.07	1.63	2.50	4.00	1.71	2.34	3.90	1.91	2.04
2/1	4.23	1.23	3.43	4.18	1.35	3.08	4.11	1.42	2.89	4.09	1.57	2.60
7/6	4.45	0.92	4.84	4.37	0.97	4.52	4.34	1.17	3.70	4.33	1.32	3.28
15/12	4.55	0.90	5.07	4.43	0.93	4.75	4.40	1.10	3.98	4.36	1.25	3.48
20/15	4.63	0.86	5.37	4.51	0.89	5.10	4.47	1.02	4.37	4.43	1.13	3.93
25/18	4.75	0.79	5.99	4.69	0.82	5.74	4.62	0.93	4.96	4.50	1.04	4.35
35/24	4.92	0.71	6.91	4.83	0.76	6.36	4.70	0.85	5.52	4.60	0.95	4.82
OAT	LWT											
	50			55			60			63		
	HC	PI	COP	HC	PI	COP	HC	PI	COP	HC	PI	COP
-25/-	2.32	2.35	0.99									
-20/-	2.94	2.33	1.27	2.73	2.69	1.02						
-15/-	3.19	2.25	1.42	3.08	2.59	1.19	2.72	2.70	1.01			
-10/-	3.56	2.21	1.61	3.48	2.45	1.42	2.80	2.57	1.09			
-7/-8	3.75	2.18	1.72	3.66	2.30	1.59	2.88	2.38	1.21			
2/1	4.02	1.89	2.13	3.96	2.04	1.94	3.04	2.16	1.41			
7/6	4.31	1.55	2.78	4.30	1.75	2.45	3.35	1.87	1.79			
15/12	4.34	1.36	3.20	4.32	1.57	2.75	3.57	1.61	2.22	3.27	1.89	1.73
20/15	4.40	1.23	3.57	4.35	1.32	3.29	3.77	1.46	2.58	3.37	1.77	1.90
25/18	4.44	1.13	3.94	4.40	1.20	3.67	3.89	1.32	2.94			
35/24	4.49	1.02	4.39	4.43	1.11	4.00	4.18	1.24	3.37			

Note:
Heating capacity and power input are included defrost cycle.
OAT: Outdoor ambient temperature
LWT: Leaving water temperature
HC: Heating capacity
PI: Power input

Peak heating capacity table:

OAT	LWT											
	30			35			40			45		
	HC	PI	COP	HC	PI	COP	HC	PI	COP	HC	PI	COP
-25/-	2.78	1.74	1.60	2.65	1.84	1.44	2.58	1.99	1.30	2.59	2.13	1.22
-20/-	3.41	1.66	2.06	3.25	1.76	1.85	3.21	1.89	1.70	3.16	2.07	1.53
-15/-	3.75	1.60	2.34	3.67	1.69	2.17	3.62	1.84	1.97	3.53	2.01	1.75
-10/-	4.19	1.51	2.78	4.11	1.64	2.50	4.04	1.76	2.30	3.87	1.96	1.98
-7/-8	4.34	1.43	3.04	4.28	1.60	2.68	4.17	1.68	2.48	4.06	1.87	2.17
2/1	4.41	1.21	3.65	4.35	1.33	3.28	4.28	1.39	3.08	4.26	1.54	2.76
7/6	4.45	0.92	4.84	4.37	0.97	4.52	4.34	1.17	3.70	4.33	1.32	3.28
15/12	4.55	0.90	5.07	4.43	0.93	4.75	4.40	1.10	3.98	4.36	1.25	3.48
20/15	4.63	0.86	5.37	4.51	0.89	5.10	4.47	1.02	4.37	4.43	1.13	3.93
25/18	4.75	0.79	5.99	4.69	0.82	5.74	4.62	0.93	4.96	4.50	1.04	4.35
35/24	4.92	0.71	6.91	4.83	0.76	6.36	4.70	0.85	5.52	4.60	0.95	4.82
OAT	LWT											
	50			55			60			63		
	HC	PI	COP	HC	PI	COP	HC	PI	COP	HC	PI	COP
-25/-	2.38	2.33	1.02									
-20/-	3.07	2.28	1.35	2.70	2.63	1.03						
-15/-	3.33	2.21	1.51	3.21	2.54	1.26	2.76	2.65	1.05			
-10/-	3.70	2.17	1.71	3.63	2.41	1.51	2.88	2.52	1.14			
-7/-8	3.91	2.14	1.83	3.78	2.25	1.68	3.00	2.33	1.29			
2/1	4.19	1.85	2.26	4.13	2.00	2.07	3.16	2.12	1.50			
7/6	4.31	1.55	2.78	4.30	1.75	2.45	3.35	1.87	1.79			
15/12	4.34	1.36	3.20	4.32	1.57	2.75	3.57	1.61	2.22	3.27	1.89	1.73
20/15	4.40	1.23	3.57	4.35	1.32	3.29	3.77	1.46	2.58	3.37	1.77	1.90
25/18	4.44	1.13	3.94	4.40	1.20	3.67	3.89	1.32	2.94			
35/24	4.49	1.02	4.39	4.43	1.11	4.00	4.18	1.24	3.37			

Note:
Heating capacity and power input are not included defrost cycle.
OAT: Outdoor ambient temperature
LWT: Leaving water temperature
HC: Heating capacity
PI: Power input

Cooling

Nominal Cooling capacity table:

OAT	LWT											
	25.00			20.00			18.00			15.00		
	CC	PI	COP	CC	PI	COP	CC	PI	COP	CC	PI	COP
-5/-0	5.41	0.46	11.83	5.22	0.48	10.82	4.92	0.49	10.00	4.77	0.55	8.66
0/-	5.26	0.50	10.53	5.06	0.53	9.63	4.78	0.54	8.90	4.63	0.60	7.71
5/-	5.11	0.61	8.32	4.92	0.65	7.60	4.64	0.66	7.03	4.50	0.74	6.09
10/0	5.08	0.74	6.86	4.90	0.78	6.27	4.62	0.80	5.80	4.48	0.89	5.02
15/5	5.05	0.83	6.06	4.86	0.88	5.54	4.59	0.90	5.12	4.45	1.00	4.43
20/10	4.86	0.85	5.69	4.68	0.90	5.20	4.42	0.92	4.81	4.29	1.03	4.17
25/15	4.82	0.90	5.37	4.65	0.95	4.91	4.38	0.97	4.54	4.25	1.08	3.93
30/20	4.65	0.93	5.00	4.48	0.98	4.58	4.23	1.00	4.23	4.10	1.12	3.66
35/24	4.43	0.97	4.55	4.27	1.03	4.16	4.03	1.05	3.85	4.01	1.17	3.42
40/28	4.24	0.99	4.29	4.08	1.04	3.93	3.85	1.06	3.63	3.73	1.19	3.14
45/30	3.92	1.03	3.78	3.77	1.09	3.46	3.56	1.11	3.20	3.45	1.25	2.77
50/33	3.39	1.12	3.03	3.26	1.18	2.77	3.08	1.20	2.56	2.99	1.35	2.22
OAT	LWT											
	10.00			7.00			5.00			-		
	CC	PI	COP	CC	PI	COP	CC	PI	COP	CC	PI	COP
-5/-0	-	-	-	-	-	-	-	-	-	-	-	-
0/-	-	-	-	-	-	-	-	-	-	-	-	-
5/-	-	-	-	-	-	-	-	-	-	-	-	-
10/0	-	-	-	-	-	-	-	-	-	-	-	-
15/5	4.36	1.12	3.89	4.27	1.19	3.58	4.13	1.22	3.39	-	-	-
20/10	4.20	1.15	3.66	4.11	1.22	3.36	3.98	1.25	3.18	-	-	-
25/15	4.17	1.21	3.45	4.08	1.28	3.17	3.95	1.31	3.00	-	-	-
30/20	4.02	1.25	3.21	4.00	1.33	3.01	3.81	1.36	2.80	-	-	-
35/24	4.00	1.31	3.06	3.98	1.40	2.85	3.63	1.42	2.55	-	-	-
40/28	3.66	1.33	2.76	3.58	1.41	2.54	3.47	1.44	2.40	-	-	-
45/30	3.38	1.39	2.43	3.31	1.48	2.24	3.20	1.51	2.12	-	-	-
50/33	2.93	1.50	1.95	2.86	1.60	1.79	2.77	1.64	1.69	-	-	-

Note:
OAT: Outdoor ambient temperature
LWT: Leaving water temperature
CC: Cooling capacity
PI: Power input

Peak cooling capacity table:

OAT	LWT											
	25.00			20.00			18.00			15.00		
	CC	PI	COP	CC	PI	COP	CC	PI	COP	CC	PI	COP
-5/-0	5.68	0.50	11.29	5.48	0.53	10.32	5.17	0.54	9.55	5.01	0.61	8.27
0/-	5.52	0.55	10.05	5.32	0.58	9.19	5.02	0.59	8.50	4.87	0.66	7.36
5/-	5.36	0.68	7.94	5.17	0.71	7.26	4.87	0.73	6.71	4.73	0.81	5.81
10/0	5.34	0.81	6.55	5.14	0.86	5.99	4.85	0.88	5.54	4.71	0.98	4.79
15/5	5.30	0.92	5.78	5.11	0.97	5.29	4.82	0.99	4.89	4.67	1.10	4.23
20/10	5.10	0.94	5.43	4.92	0.99	4.97	4.64	1.01	4.59	4.50	1.13	3.98
25/15	5.06	0.99	5.13	4.88	1.04	4.69	4.60	1.06	4.33	4.47	1.19	3.75
30/20	4.89	1.02	4.78	4.71	1.08	4.37	4.44	1.10	4.04	4.31	1.23	3.50
35/24	4.65	1.07	4.35	4.49	1.13	3.98	4.23	1.15	3.68	4.21	1.29	3.26
40/28	4.45	1.09	4.10	4.29	1.14	3.75	4.04	1.17	3.47	3.92	1.31	3.00
45/30	4.11	1.14	3.61	3.96	1.20	3.30	3.74	1.22	3.05	3.63	1.37	2.65
50/33	3.56	1.23	2.89	3.43	1.30	2.64	3.23	1.32	2.44	3.14	1.48	2.12
OAT	LWT											
	10.00			7.00			5.00			-		
	CC	PI	COP	CC	PI	COP	CC	PI	COP	CC	PI	COP
-5/-0	-	-	-	-	-	-	-	-	-	-	-	-
0/-	-	-	-	-	-	-	-	-	-	-	-	-
5/-	-	-	-	-	-	-	-	-	-	-	-	-
10/0	-	-	-	-	-	-	-	-	-	-	-	-
15/5	4.58	1.23	3.71	4.48	1.31	3.42	4.34	1.34	3.23	-	-	-
20/10	4.41	1.26	3.49	4.31	1.34	3.21	4.18	1.37	3.04	-	-	-
25/15	4.37	1.33	3.29	4.28	1.41	3.03	4.14	1.44	2.87	-	-	-
30/20	4.22	1.38	3.07	4.20	1.46	2.87	4.00	1.50	2.67	-	-	-
35/24	4.20	1.44	2.92	4.18	1.54	2.72	3.81	1.57	2.43	-	-	-
40/28	3.84	1.46	2.63	3.76	1.55	2.42	3.64	1.59	2.29	-	-	-
45/30	3.55	1.53	2.32	3.48	1.63	2.14	3.36	1.66	2.02	-	-	-
50/33	3.07	1.65	1.86	3.01	1.76	1.71	2.91	1.80	1.62	-	-	-

Note:
OAT: Outdoor ambient temperature
LWT: Leaving water temperature
CC: Cooling capacity
PI: Power input

Model: 6kW
Heating
Nominal heating capacity table:

OAT	LWT											
	30			35			40			45		
	HC	PI	COP	HC	PI	COP	HC	PI	COP	HC	PI	COP
-25/-	3.68	2.39	1.54	3.57	2.53	1.41	3.41	2.74	1.24	3.32	2.93	1.13
-20/-	4.74	2.28	2.08	4.52	2.42	1.86	4.46	2.60	1.72	4.40	2.85	1.54
-15/-	5.21	2.20	2.37	5.10	2.33	2.19	5.03	2.53	1.98	4.91	2.77	1.77
-10/-	5.82	2.07	2.81	5.72	2.26	2.52	5.61	2.42	2.32	5.37	2.69	2.00
-7/-8	6.03	1.96	3.07	5.94	2.17	2.74	5.87	2.31	2.54	5.64	2.58	2.19
2/1	6.12	1.66	3.68	5.78	1.78	3.25	6.02	1.92	3.14	5.99	2.12	2.82
7/6	6.18	1.27	4.88	6.02	1.34	4.50	6.03	1.62	3.73	6.00	1.74	3.45
15/12	6.32	1.24	5.11	6.15	1.28	4.80	6.11	1.52	4.02	6.06	1.66	3.65
20/15	6.44	1.19	5.42	6.27	1.22	5.14	6.21	1.41	4.41	6.15	1.55	3.96
25/18	6.60	1.09	6.04	6.51	1.12	5.79	6.42	1.28	5.01	6.26	1.43	4.39
35/24	6.84	0.98	6.97	6.71	1.05	6.42	6.53	1.17	5.57	6.39	1.31	4.86
OAT	LWT											
	50			55			60			63		
	HC	PI	COP	HC	PI	COP	HC	PI	COP	HC	PI	COP
-25/-	3.26	3.19	1.02									
-20/-	4.26	3.14	1.36	3.75	3.52	1.07						
-15/-	4.62	3.06	1.51	4.46	3.41	1.31	3.77	3.49	1.08			
-10/-	5.15	2.98	1.73	4.93	3.24	1.52	4.19	3.33	1.26			
-7/-8	5.36	2.88	1.86	5.04	2.90	1.74	4.43	3.09	1.43			
2/1	5.97	2.55	2.34	5.94	2.80	2.12	4.65	2.91	1.60			
7/6	5.99	2.06	2.91	5.85	2.15	2.72	4.78	2.58	1.85			
15/12	6.03	1.87	3.23	5.93	2.09	2.84	4.97	2.22	2.24	4.55	2.38	1.91
20/15	6.11	1.69	3.60	6.05	1.84	3.29	5.24	2.01	2.60	4.68	2.28	2.05
25/18	6.17	1.55	3.97	6.11	1.66	3.67	5.40	1.82	2.97			
35/24	6.24	1.41	4.43	6.15	1.54	4.00	5.81	1.71	3.39			

Note:
Nominal heating capacity and power input are included defrost cycle.
OAT: Outdoor ambient temperature
LWT: Leaving water temperature
HC: Heating capacity
PI: Power input

Average heating capacity table:

OAT	LWT											
	30			35			40			45		
	HC	PI	COP	HC	PI	COP	HC	PI	COP	HC	PI	COP
-25/-	4.38	2.76	1.59	4.13	2.92	1.41	3.85	3.16	1.22	3.73	3.38	1.11
-20/-	4.87	2.63	1.85	4.64	2.79	1.66	4.58	2.99	1.53	4.51	3.28	1.37
-15/-	5.35	2.54	2.11	5.24	2.68	1.95	5.16	2.92	1.77	5.04	3.19	1.58
-10/-	5.98	2.39	2.50	5.76	2.61	2.21	5.63	2.79	2.02	5.52	3.10	1.78
-7/-8	6.19	2.26	2.74	5.98	2.50	2.39	5.92	2.66	2.22	5.79	2.97	1.95
2/1	6.29	1.92	3.28	6.09	2.05	2.97	6.01	2.21	2.72	5.93	2.45	2.42
7/6	6.61	1.43	4.62	6.47	1.51	4.28	6.40	1.82	3.51	6.29	1.97	3.20
15/12	6.76	1.40	4.84	6.58	1.45	4.54	6.53	1.72	3.80	6.48	1.88	3.46
20/15	6.89	1.34	5.13	6.71	1.38	4.87	6.64	1.59	4.17	6.58	1.75	3.75
25/18	7.06	1.23	5.72	6.97	1.27	5.48	6.87	1.45	4.74	6.69	1.61	4.16
35/24	7.32	1.11	6.60	7.17	1.18	6.08	6.98	1.32	5.27	6.84	1.49	4.60
OAT	LWT											
	50			55			60			63		
	HC	PI	COP	HC	PI	COP	HC	PI	COP	HC	PI	COP
-25/-	3.63	3.61	1.01									
-20/-	4.29	3.56	1.21	4.09	4.06	1.01						
-15/-	4.75	3.53	1.35	4.58	3.93	1.16	4.05	4.02	1.01			
-10/-	5.28	3.43	1.54	5.06	3.73	1.36	4.30	3.84	1.12			
-7/-8	5.51	3.32	1.66	5.18	3.34	1.55	4.55	3.56	1.28			
2/1	5.77	2.94	1.96	5.65	3.23	1.75	4.78	3.35	1.42			
7/6	6.20	2.33	2.66	6.05	2.43	2.49	5.11	2.92	1.75			
15/12	6.45	2.11	3.06	6.35	2.36	2.69	5.31	2.50	2.12	4.82	2.71	1.78
20/15	6.53	1.91	3.41	6.47	2.08	3.12	5.60	2.27	2.47	4.96	2.58	1.93
25/18	6.60	1.75	3.76	6.53	1.88	3.48	5.78	2.06	2.81			
35/24	6.68	1.59	4.19	6.58	1.74	3.79	6.21	1.93	3.21			

Note:
Heating capacity and power input are included defrost cycle.
OAT: Outdoor ambient temperature
LWT: Leaving water temperature
HC: Heating capacity
PI: Power input

Peak heating capacity table:

OAT	LWT											
	30			35			40			45		
	HC	PI	COP	HC	PI	COP	HC	PI	COP	HC	PI	COP
-25/-	4.56	2.70	1.69	4.30	2.86	1.50	4.01	3.10	1.30	3.89	3.31	1.18
-20/-	5.07	2.58	1.97	4.83	2.74	1.76	4.77	2.93	1.62	4.70	3.22	1.46
-15/-	5.57	2.49	2.24	5.46	2.63	2.07	5.38	2.86	1.88	5.25	3.13	1.68
-10/-	6.23	2.34	2.66	6.00	2.56	2.35	5.86	2.74	2.14	5.75	3.04	1.89
-7/-8	6.45	2.22	2.91	6.23	2.45	2.54	6.16	2.61	2.36	6.03	2.92	2.07
2/1	6.55	1.88	3.49	6.35	2.01	3.16	6.26	2.16	2.89	6.17	2.40	2.58
7/6	6.61	1.43	4.62	6.47	1.51	4.28	6.40	1.82	3.51	6.29	1.97	3.20
15/12	6.76	1.40	4.84	6.58	1.45	4.54	6.53	1.72	3.80	6.48	1.88	3.46
20/15	6.89	1.34	5.13	6.71	1.38	4.87	6.64	1.59	4.17	6.58	1.75	3.75
25/18	7.06	1.23	5.72	6.97	1.27	5.48	6.87	1.45	4.74	6.69	1.61	4.16
35/24	7.32	1.11	6.60	7.17	1.18	6.08	6.98	1.32	5.27	6.84	1.49	4.60
OAT	LWT											
	50			55			60			63		
	HC	PI	COP	HC	PI	COP	HC	PI	COP	HC	PI	COP
-25/-	3.72	3.54	1.05									
-20/-	4.47	3.49	1.28	4.16	3.98	1.05						
-15/-	4.94	3.46	1.43	4.77	3.85	1.24	4.22	3.94	1.07			
-10/-	5.51	3.37	1.63	5.28	3.66	1.44	4.48	3.76	1.19			
-7/-8	5.74	3.25	1.76	5.39	3.27	1.65	4.74	3.49	1.36			
2/1	6.01	2.88	2.09	5.89	3.17	1.86	4.98	3.29	1.51			
7/6	6.20	2.33	2.66	6.05	2.43	2.49	5.11	2.92	1.75			
15/12	6.45	2.11	3.06	6.35	2.36	2.69	5.31	2.50	2.12	4.82	2.71	1.78
20/15	6.53	1.91	3.41	6.47	2.08	3.12	5.60	2.27	2.47	4.96	2.58	1.93
25/18	6.60	1.75	3.76	6.53	1.88	3.48	5.78	2.06	2.81			
35/24	6.68	1.59	4.19	6.58	1.74	3.79	6.21	1.93	3.21			

Note:
Heating capacity and power input are not included defrost cycle.
OAT: Outdoor ambient temperature
LWT: Leaving water temperature
HC: Heating capacity
PI: Power input

Cooling

Nominal cooling capacity table:

OAT	LWT											
	25.00			20.00			18.00			15.00		
	CC	PI	COP	CC	PI	COP	CC	PI	COP	CC	PI	COP
-5/-0	7.13	0.60	11.86	6.97	0.63	11.00	6.72	0.65	10.35	6.51	0.72	8.99
0/-	7.01	0.66	10.68	6.91	0.71	9.80	6.52	0.72	9.06	6.32	0.79	8.00
5/-	6.97	0.79	8.82	6.72	0.83	8.09	6.34	0.87	7.28	6.15	0.97	6.32
10/0	6.94	0.95	7.30	6.68	1.00	6.68	6.30	1.05	6.00	6.12	1.17	5.22
15/5	6.87	1.10	6.27	6.64	1.15	5.75	6.26	1.18	5.30	6.07	1.32	4.60
20/10	6.63	1.12	5.91	6.39	1.18	5.40	6.03	1.21	4.98	5.85	1.35	4.33
25/15	6.58	1.18	5.58	6.34	1.24	5.10	5.98	1.27	4.70	5.80	1.42	4.08
30/20	6.35	1.22	5.20	6.12	1.29	4.75	5.77	1.32	4.38	5.60	1.47	3.80
35/24	6.05	1.28	4.73	5.83	1.35	4.32	5.50	1.37	4.01	5.43	1.54	3.52
40/28	5.78	1.30	4.46	5.57	1.37	4.08	5.25	1.40	3.76	5.10	1.56	3.26
45/30	5.34	1.36	3.93	5.15	1.43	3.59	4.86	1.47	3.31	4.71	1.64	2.88
50/33	4.62	1.47	3.14	4.46	1.55	2.88	4.20	1.59	2.65	4.08	1.77	2.30
OAT	LWT											
	10.00			7.00			5.00			-		
	CC	PI	COP	CC	PI	COP	CC	PI	COP	CC	PI	COP
-5/-0	-	-	-	-	-	-	-	-	-	-	-	-
0/-	-	-	-	-	-	-	-	-	-	-	-	-
5/-	-	-	-	-	-	-	-	-	-	-	-	-
10/0	-	-	-	-	-	-	-	-	-	-	-	-
15/5	5.95	1.47	4.04	5.82	1.57	3.72	5.64	1.60	3.52	-	-	-
20/10	5.73	1.51	3.80	5.61	1.61	3.49	5.43	1.64	3.31	-	-	-
25/15	5.68	1.59	3.58	5.57	1.69	3.30	5.39	1.73	3.12	-	-	-
30/20	5.48	1.64	3.34	5.46	1.75	3.12	5.20	1.79	2.91	-	-	-
35/24	5.21	1.72	3.03	5.00	1.82	2.75	4.95	1.87	2.65	-	-	-
40/28	4.99	1.74	2.86	4.89	1.85	2.64	4.73	1.90	2.49	-	-	-
45/30	4.62	1.83	2.53	4.52	1.94	2.32	4.37	1.99	2.20	-	-	-
50/33	3.99	1.98	2.02	3.91	2.10	1.86	3.78	2.15	1.76	-	-	-

Note:
OAT: Outdoor ambient temperature
LWT: Leaving water temperature
CC: Cooling capacity
PI: Power input

Peak cooling capacity table:

OAT	LWT											
	25.00			20.00			18.00			15.00		
	CC	PI	COP	CC	PI	COP	CC	PI	COP	CC	PI	COP
-5/-0	7.49	0.66	11.32	7.32	0.70	10.50	7.05	0.71	9.88	6.84	0.80	8.58
0/-	7.36	0.72	10.20	7.26	0.78	9.36	6.85	0.79	8.64	6.64	0.87	7.64
5/-	7.32	0.87	8.42	7.05	0.91	7.72	6.65	0.96	6.95	6.45	1.07	6.03
10/0	7.28	1.05	6.97	7.02	1.10	6.38	6.62	1.16	5.73	6.42	1.29	4.98
15/5	7.21	1.20	5.99	6.97	1.27	5.49	6.58	1.30	5.06	6.38	1.45	4.40
20/10	6.96	1.24	5.64	6.71	1.30	5.16	6.33	1.33	4.75	6.14	1.49	4.13
25/15	6.91	1.30	5.32	6.66	1.37	4.87	6.28	1.40	4.49	6.09	1.56	3.90
30/20	6.67	1.34	4.96	6.43	1.42	4.54	6.06	1.45	4.18	5.88	1.62	3.63
35/24	6.35	1.41	4.51	6.12	1.48	4.13	5.78	1.51	3.83	5.70	1.69	3.36
40/28	6.07	1.43	4.26	5.85	1.50	3.89	5.52	1.54	3.59	5.35	1.72	3.12
45/30	5.61	1.50	3.75	5.41	1.58	3.43	5.10	1.61	3.16	4.95	1.80	2.75
50/33	4.86	1.62	3.00	4.68	1.70	2.74	4.41	1.74	2.53	4.28	1.95	2.20
OAT	LWT											
	10.00			7.00			5.00			-		
	CC	PI	COP	CC	PI	COP	CC	PI	COP	CC	PI	COP
-5/-0	-	-	-	-	-	-	-	-	-	-	-	-
0/-	-	-	-	-	-	-	-	-	-	-	-	-
5/-	-	-	-	-	-	-	-	-	-	-	-	-
10/0	-	-	-	-	-	-	-	-	-	-	-	-
15/5	6.25	1.62	3.86	6.12	1.72	3.55	5.86	1.76	3.33	-	-	-
20/10	6.02	1.66	3.62	5.89	1.77	3.33	5.64	1.81	3.13	-	-	-
25/15	5.97	1.75	3.42	5.84	1.86	3.15	5.60	1.90	2.95	-	-	-
30/20	5.76	1.81	3.19	5.73	1.92	2.98	5.40	1.97	2.75	-	-	-
35/24	5.47	1.89	2.89	5.25	2.00	2.63	5.15	2.06	2.50	-	-	-
40/28	5.24	1.92	2.73	5.13	2.04	2.52	4.92	2.09	2.36	-	-	-
45/30	4.85	2.01	2.41	4.74	2.14	2.22	4.55	2.19	2.08	-	-	-
50/33	4.19	2.17	1.93	4.10	2.31	1.77	3.93	2.37	1.66	-	-	-

Note:
OAT: Outdoor ambient temperature
LWT: Leaving water temperature
CC: Cooling capacity
PI: Power input

Model: 8kW
Heating
Nominal heating capacity table:

OAT	LWT											
	30			35			40			45		
	HC	PI	COP	HC	PI	COP	HC	PI	COP	HC	PI	COP
-25/-	4.90	3.02	1.62	4.76	3.20	1.49	4.54	3.46	1.31	4.42	3.70	1.19
-20/-	6.32	2.88	2.19	6.02	3.06	1.97	5.94	3.28	1.81	5.86	3.60	1.63
-15/-	6.94	2.78	2.50	6.80	3.00	2.27	6.70	3.20	2.09	6.54	3.50	1.87
-10/-	7.76	2.62	2.96	7.62	2.96	2.57	7.48	3.06	2.44	7.16	3.40	2.11
-7/-8	8.04	2.48	3.24	7.97	2.93	2.70	7.82	3.00	2.61	7.52	3.26	2.31
2/1	8.16	2.10	3.89	7.85	2.30	3.42	7.95	2.42	3.29	7.93	2.68	2.96
7/6	8.24	1.60	5.15	8.03	1.67	4.75	7.99	2.04	3.92	7.97	2.21	3.60
15/12	8.42	1.56	5.40	8.20	1.62	5.06	8.08	1.92	4.21	8.08	2.18	3.71
20/15	8.58	1.50	5.72	8.36	1.54	5.43	8.28	1.78	4.65	8.20	1.96	4.18
25/18	8.77	1.38	6.36	8.54	1.42	6.01	8.43	1.62	5.20	8.34	1.80	4.63
35/24	9.02	1.24	7.27	8.79	1.32	6.66	8.62	1.48	5.82	8.52	1.66	5.13
OAT	LWT											
	50			55			60			63		
	HC	PI	COP	HC	PI	COP	HC	PI	COP	HC	PI	COP
-25/-	4.34	4.10	1.06									
-20/-	5.68	4.00	1.42	5.00	4.62	1.08						
-15/-	6.16	3.96	1.56	5.94	4.46	1.33	5.12	4.60	1.11			
-10/-	6.86	3.84	1.79	6.72	4.22	1.59	5.34	4.38	1.22			
-7/-8	7.24	3.44	2.10	7.00	3.59	1.95	5.56	4.06	1.37			
2/1	7.91	3.22	2.46	7.95	3.46	2.30	5.86	3.68	1.59			
7/6	7.93	2.53	3.13	7.78	2.70	2.88	6.20	3.17	1.96			
15/12	8.04	2.36	3.41	7.96	2.64	3.02	6.62	2.80	2.36	6.06	3.00	2.02
20/15	8.14	2.14	3.80	8.06	2.32	3.47	6.98	2.54	2.75	6.24	2.88	2.17
25/18	8.22	1.96	4.19	8.14	2.10	3.88	7.20	2.30	3.13			
35/24	8.32	1.78	4.67	8.20	1.94	4.23	7.74	2.16	3.58			

Note:
Nominal heating capacity and power input are included defrost cycle.
OAT: Outdoor ambient temperature
LWT: Leaving water temperature
HC: Heating capacity
PI: Power input

Average heating capacity table:

OAT	LWT											
	30			35			40			45		
	HC	PI	COP	HC	PI	COP	HC	PI	COP	HC	PI	COP
-25/-	5.51	3.48	1.58	5.20	3.69	1.41	4.95	3.99	1.24	4.78	4.26	1.12
-20/-	6.55	3.32	1.97	6.24	3.53	1.77	6.16	3.78	1.63	6.08	4.15	1.46
-15/-	7.20	3.20	2.25	7.05	3.46	2.04	6.95	3.69	1.88	6.78	4.03	1.68
-10/-	8.05	3.02	2.66	7.90	3.41	2.32	7.76	3.53	2.20	7.42	3.92	1.89
-7/-8	8.34	2.86	2.92	8.15	3.20	2.54	8.00	3.33	2.40	7.80	3.76	2.07
2/1	8.46	2.42	3.50	8.26	2.65	3.12	8.17	2.79	2.93	7.99	3.09	2.59
7/6	8.90	1.81	4.92	8.76	1.89	4.64	8.63	2.31	3.74	8.47	2.50	3.38
15/12	9.09	1.76	5.16	8.86	1.83	4.84	8.73	2.17	4.02	8.61	2.46	3.49
20/15	9.27	1.70	5.47	9.03	1.74	5.19	8.94	2.01	4.45	8.86	2.21	4.00
25/18	9.47	1.56	6.07	9.22	1.60	5.75	9.10	1.83	4.97	9.01	2.03	4.43
35/24	9.74	1.40	6.95	9.49	1.49	6.36	9.31	1.67	5.57	9.20	1.88	4.91
OAT	LWT											
	50			55			60			62		
	HC	PI	COP	HC	PI	COP	HC	PI	COP	HC	PI	COP
-25/-	4.63	4.65	1.00									
-20/-	5.89	4.61	1.28	5.39	5.33	1.01						
-15/-	6.39	4.56	1.40	6.10	5.14	1.19	5.37	5.30	1.01			
-10/-	7.11	4.43	1.61	6.90	4.86	1.42	5.49	5.05	1.09			
-7/-8	7.51	3.96	1.89	7.19	4.14	1.74	5.71	4.68	1.22			
2/1	7.87	3.71	2.12	7.48	3.98	1.88	6.02	4.24	1.42			
7/6	8.33	2.86	2.91	8.11	3.05	2.66	6.78	3.58	1.89			
15/12	8.49	2.67	3.18	8.29	2.98	2.78	7.18	3.16	2.27	6.29	3.48	1.81
20/15	8.79	2.42	3.64	8.62	2.62	3.29	7.69	2.87	2.68	6.44	3.30	1.95
25/18	8.88	2.21	4.01	8.71	2.37	3.67	7.92	2.60	3.05			
35/24	8.99	2.01	4.47	8.77	2.19	4.00	8.28	2.44	3.39			

Note:
Heating capacity and power input are included defrost cycle.
OAT: Outdoor ambient temperature
LWT: Leaving water temperature
HC: Heating capacity
PI: Power input

Peak heating capacity table:

OAT	LWT											
	30			35			40			45		
	HC	PI	COP	HC	PI	COP	HC	PI	COP	HC	PI	COP
-25/-	5.73	3.41	1.68	5.42	3.62	1.50	5.15	3.91	1.32	4.98	4.18	1.19
-20/-	6.83	3.25	2.10	6.50	3.46	1.88	6.42	3.71	1.73	6.33	4.07	1.56
-15/-	7.50	3.14	2.39	7.34	3.39	2.17	7.24	3.62	2.00	7.06	3.96	1.79
-10/-	8.38	2.96	2.83	8.23	3.34	2.46	8.08	3.46	2.34	7.73	3.84	2.01
-7/-8	8.68	2.80	3.10	8.49	3.14	2.70	8.34	3.27	2.55	8.12	3.68	2.20
2/1	8.81	2.37	3.71	8.61	2.59	3.32	8.51	2.73	3.11	8.33	3.03	2.75
7/6	8.90	1.81	4.92	8.76	1.89	4.64	8.63	2.31	3.74	8.47	2.50	3.38
15/12	9.09	1.76	5.16	8.86	1.83	4.84	8.73	2.17	4.02	8.61	2.46	3.49
20/15	9.27	1.70	5.47	9.03	1.74	5.19	8.94	2.01	4.45	8.86	2.21	4.00
25/18	9.47	1.56	6.07	9.22	1.60	5.75	9.10	1.83	4.97	9.01	2.03	4.43
35/24	9.74	1.40	6.95	9.49	1.49	6.36	9.31	1.67	5.57	9.20	1.88	4.91
OAT	LWT											
	50			55			60			63		
	HC	PI	COP	HC	PI	COP	HC	PI	COP	HC	PI	COP
-25/-	4.83	4.56	1.06									
-20/-	6.13	4.52	1.36	5.61	5.22	1.07						
-15/-	6.65	4.47	1.49	6.36	5.04	1.26	5.59	5.20	1.08			
-10/-	7.41	4.34	1.71	7.19	4.77	1.51	5.71	4.95	1.15			
-7/-8	7.82	3.89	2.01	7.49	4.06	1.85	5.95	4.59	1.30			
2/1	8.20	3.64	2.25	7.79	3.91	1.99	6.27	4.16	1.51			
7/6	8.33	2.86	2.91	8.11	3.05	2.66	6.78	3.58	1.89			
15/12	8.49	2.67	3.18	8.29	2.98	2.78	7.18	3.16	2.27	6.29	3.48	1.81
20/15	8.79	2.42	3.64	8.62	2.62	3.29	7.69	2.87	2.68	6.44	3.30	1.95
25/18	8.88	2.21	4.01	8.71	2.37	3.67	7.92	2.60	3.05			
35/24	8.99	2.01	4.47	8.77	2.19	4.00	8.28	2.44	3.39			

Note:
Heating capacity and power input are not included defrost cycle.
OAT: Outdoor ambient temperature
LWT: Leaving water temperature
HC: Heating capacity
PI: Power input

Cooling

Nominal cooling capacity table:

OAT	LWT											
	25.00			20.00			18.00			15.00		
	CC	PI	COP	CC	PI	COP	CC	PI	COP	CC	PI	COP
-5/-0	9.21	0.71	12.97	9.06	0.73	12.41	8.45	0.75	11.31	8.16	0.83	9.78
0/-	9.13	0.76	12.07	8.80	0.80	11.04	8.30	0.82	10.18	8.05	0.91	8.84
5/-	8.94	0.93	9.61	8.55	0.98	8.72	8.06	1.00	8.04	7.82	1.12	6.98
10/0	8.83	1.07	8.25	8.51	1.18	7.20	8.02	1.21	6.63	7.78	1.35	5.76
15/5	8.77	1.26	6.95	8.36	1.29	6.48	7.97	1.36	5.85	7.73	1.52	5.09
20/10	8.44	1.29	6.53	8.14	1.36	5.97	7.67	1.40	5.50	7.44	1.56	4.78
25/15	8.38	1.36	6.16	8.07	1.43	5.63	7.62	1.47	5.19	7.39	1.64	4.51
30/20	8.08	1.41	5.74	7.79	1.48	5.25	7.35	1.52	4.84	7.13	1.70	4.20
35/24	7.70	1.47	5.22	7.42	1.55	4.78	7.00	1.59	4.40	6.81	1.78	3.84
40/28	7.36	1.49	4.92	7.09	1.57	4.50	6.69	1.61	4.15	6.49	1.80	3.61
45/30	6.80	1.61	4.22	6.55	1.66	3.95	6.18	1.70	3.64	6.00	1.89	3.18
50/33	5.88	1.78	3.31	5.67	1.82	3.12	5.35	1.87	2.86	5.19	2.04	2.54
OAT	LWT											
	10.00			7.00			5.00			-		
	CC	PI	COP	CC	PI	COP	CC	PI	COP	CC	PI	COP
-5/-0	-	-	-	-	-	-	-	-	-	-	-	-
0/-	-	-	-	-	-	-	-	-	-	-	-	-
5/-	-	-	-	-	-	-	-	-	-	-	-	-
10/0	-	-	-	-	-	-	-	-	-	-	-	-
15/5	7.57	1.70	4.46	7.41	1.80	4.11	7.17	1.85	3.89	-	-	-
20/10	7.29	1.74	4.19	7.14	1.85	3.86	6.91	1.89	3.65	-	-	-
25/15	7.24	1.83	3.96	7.08	1.95	3.64	6.85	1.99	3.45	-	-	-
30/20	6.98	1.89	3.69	6.95	2.01	3.45	6.61	2.06	3.21	-	-	-
35/24	6.67	1.98	3.37	6.50	2.24	2.90	6.04	2.16	2.80	-	-	-
40/28	6.35	2.01	3.16	6.22	2.29	2.72	5.87	2.18	2.69	-	-	-
45/30	5.87	2.11	2.79	5.75	2.35	2.45	5.57	2.29	2.43	-	-	-
50/33	5.08	2.28	2.23	4.98	2.42	2.05	4.81	2.48	1.94	-	-	-

Note:
OAT: Outdoor ambient temperature
LWT: Leaving water temperature
CC: Cooling capacity
PI: Power input

Peak cooling capacity table:

OAT	LWT											
	25.00			20.00			18.00			15.00		
	CC	PI	COP	CC	PI	COP	CC	PI	COP	CC	PI	COP
-5/-0	9.95	0.81	12.29	9.78	0.83	11.75	9.13	0.85	10.71	8.81	0.95	9.26
0/-	9.86	0.86	11.44	9.50	0.91	10.46	8.96	0.93	9.64	8.69	1.04	8.38
5/-	9.66	1.06	9.11	9.23	1.12	8.26	8.71	1.14	7.62	8.45	1.28	6.62
10/0	9.53	1.22	7.82	9.19	1.35	6.82	8.67	1.38	6.28	8.41	1.54	5.46
15/5	9.47	1.44	6.58	9.03	1.47	6.14	8.61	1.55	5.55	8.35	1.73	4.82
20/10	9.12	1.47	6.18	8.79	1.55	5.65	8.29	1.59	5.21	8.04	1.78	4.53
25/15	9.05	1.55	5.84	8.72	1.63	5.34	8.23	1.67	4.92	7.98	1.87	4.27
30/20	8.73	1.61	5.44	8.41	1.69	4.97	7.94	1.73	4.58	7.70	1.93	3.98
35/24	8.32	1.68	4.95	8.01	1.77	4.53	7.56	1.81	4.17	7.35	2.02	3.63
40/28	7.94	1.70	4.67	7.66	1.79	4.27	7.22	1.84	3.93	7.01	2.05	3.42
45/30	7.35	1.84	4.00	7.08	1.89	3.74	6.68	1.94	3.45	6.48	2.15	3.01
50/33	6.36	2.03	3.13	6.12	2.07	2.95	5.78	2.13	2.71	5.60	2.33	2.41
OAT	LWT											
	10.00			7.00			5.00			-		
	CC	PI	COP	CC	PI	COP	CC	PI	COP	CC	PI	COP
-5/-0	-	-	-	-	-	-	-	-	-	-	-	-
0/-	-	-	-	-	-	-	-	-	-	-	-	-
5/-	-	-	-	-	-	-	-	-	-	-	-	-
10/0	-	-	-	-	-	-	-	-	-	-	-	-
15/5	8.18	1.93	4.23	8.01	2.06	3.89	7.68	2.10	3.65	-	-	-
20/10	7.87	1.98	3.97	7.71	2.11	3.65	7.39	2.16	3.43	-	-	-
25/15	7.81	2.08	3.75	7.65	2.22	3.45	7.33	2.27	3.23	-	-	-
30/20	7.54	2.16	3.49	7.50	2.30	3.27	7.08	2.35	3.01	-	-	-
35/24	7.20	2.26	3.19	7.02	2.56	2.75	6.46	2.46	2.63	-	-	-
40/28	6.86	2.29	3.00	6.72	2.61	2.57	6.28	2.49	2.52	-	-	-
45/30	6.34	2.40	2.64	6.21	2.68	2.32	5.95	2.61	2.28	-	-	-
50/33	5.49	2.60	2.11	5.37	2.76	1.95	5.15	2.82	1.82	-	-	-

Note:
OAT: Outdoor ambient temperature
LWT: Leaving water temperature
CC: Cooling capacity
PI: Power input

Model: 10kW
Heating
Nominal heating capacity table:

OAT	LWT											
	30			35			40			45		
	HC	PI	COP	HC	PI	COP	HC	PI	COP	HC	PI	COP
-25/-	6.13	3.99	1.53	5.86	4.23	1.39	5.68	4.57	1.24	5.53	4.89	1.13
-20/-	7.90	3.81	2.08	7.43	4.04	1.84	7.33	4.33	1.69	7.19	4.76	1.51
-15/-	8.68	3.67	2.36	8.50	3.89	2.19	8.38	4.23	1.98	8.18	4.63	1.77
-10/-	9.70	3.46	2.80	8.97	3.56	2.52	8.62	3.80	2.27	8.37	4.26	1.96
-7/-8	10.05	3.28	3.07	9.05	3.35	2.70	8.89	3.52	2.53	8.66	3.79	2.28
2/1	10.20	2.78	3.68	10.02	2.99	3.35	9.91	3.12	3.18	9.80	3.46	2.83
7/6	10.30	2.11	4.87	10.04	2.23	4.50	10.02	2.68	3.74	10.00	2.86	3.50
15/12	10.53	2.06	5.11	10.25	2.14	4.79	10.18	2.54	4.01	10.10	2.76	3.66
20/15	10.73	1.98	5.41	10.45	2.04	5.14	10.35	2.35	4.40	10.25	2.59	3.96
25/18	11.00	1.82	6.03	10.85	1.88	5.78	10.70	2.14	5.00	10.43	2.38	4.38
35/24	11.40	1.64	6.96	11.18	1.74	6.41	10.88	1.96	5.56	10.65	2.19	4.86
OAT	LWT											
	50			55			60			63		
	HC	PI	COP	HC	PI	COP	HC	PI	COP	HC	PI	COP
-25/-	5.43	5.37	1.01									
-20/-	7.10	5.24	1.36	6.25	5.34	1.17						
-15/-	7.70	5.11	1.51	7.43	5.20	1.43	5.70	5.23	1.09			
-10/-	8.10	4.52	1.79	7.88	4.91	1.60	5.93	5.07	1.17			
-7/-8	8.48	4.07	2.08	8.02	4.22	1.90	6.03	4.78	1.26			
2/1	9.63	3.85	2.50	9.50	4.20	2.26	6.58	4.55	1.45			
7/6	9.77	3.24	3.02	9.56	3.57	2.68	7.75	4.31	1.80			
15/12	10.05	3.09	3.25	9.98	3.44	2.90	8.28	3.70	2.24	7.58	3.96	1.91
20/15	10.18	2.80	3.63	10.09	3.04	3.32	8.73	3.36	2.60	7.80	3.81	2.05
25/18	10.28	2.57	4.00	10.17	2.75	3.70	9.00	3.04	2.96			
35/24	10.40	2.33	4.46	10.25	2.54	4.03	9.68	2.85	3.39			

Note:
Nominal heating capacity and power input are included defrost cycle.
OAT: Outdoor ambient temperature
LWT: Leaving water temperature
HC: Heating capacity
PI: Power input

Average heating capacity table:

OAT	LWT											
	30			35			40			45		
	HC	PI	COP	HC	PI	COP	HC	PI	COP	HC	PI	COP
-25/-	6.87	4.64	1.48	6.60	4.92	1.34	6.31	5.32	1.19	6.12	5.69	1.08
-20/-	8.01	4.43	1.81	7.70	4.70	1.64	7.60	5.04	1.51	7.45	5.53	1.35
-15/-	8.82	4.27	2.07	8.48	4.52	1.88	8.28	4.92	1.68	8.14	5.38	1.51
-10/-	9.82	4.03	2.44	9.16	4.14	2.21	8.94	4.42	2.02	8.68	4.95	1.75
-7/-8	10.36	3.81	2.72	9.38	3.90	2.41	9.22	4.09	2.25	8.98	4.41	2.04
2/1	10.52	3.23	3.26	10.26	3.48	2.95	10.16	3.63	2.80	10.01	4.02	2.49
7/6	11.12	2.41	4.62	10.84	2.54	4.26	10.82	3.06	3.54	10.80	3.26	3.32
15/12	11.37	2.35	4.84	11.07	2.44	4.54	10.99	2.89	3.80	10.88	3.15	3.46
20/15	11.58	2.26	5.13	11.29	2.32	4.86	11.18	2.68	4.17	11.07	2.95	3.75
25/18	11.88	2.08	5.71	11.72	2.14	5.48	11.56	2.44	4.74	11.26	2.71	4.15
35/24	12.31	1.87	6.59	12.07	1.99	6.07	11.75	2.23	5.27	11.50	2.50	4.60
OAT	LWT											
	50			55			60			63		
	HC	PI	COP	HC	PI	COP	HC	PI	COP	HC	PI	COP
-25/-	6.01	6.15	0.98									
-20/-	7.22	6.09	1.19	6.48	6.21	1.04						
-15/-	7.98	5.94	1.34	7.70	6.05	1.27	6.13	6.08	1.01			
-10/-	8.40	5.26	1.60	8.17	5.71	1.43	6.32	5.90	1.07			
-7/-8	8.79	4.73	1.86	8.32	4.91	1.69	6.53	5.56	1.17			
2/1	9.88	4.48	2.21	9.63	4.88	1.97	6.82	5.29	1.29			
7/6	10.55	3.69	2.86	10.32	4.07	2.54	8.37	4.91	1.70			
15/12	10.73	3.52	3.05	10.54	3.92	2.69	8.94	4.22	2.12	8.18	4.60	1.78
20/15	10.99	3.19	3.44	10.77	3.46	3.11	9.42	3.83	2.46	8.42	4.41	1.91
25/18	11.10	2.93	3.79	10.98	3.14	3.50	9.72	3.46	2.81			
35/24	11.23	2.66	4.23	11.07	2.90	3.82	10.45	3.25	3.21			

Note:
Heating capacity and power input are included defrost cycle.
OAT: Outdoor ambient temperature
LWT: Leaving water temperature
HC: Heating capacity
PI: Power input

Peak heating capacity table:

OAT	LWT											
	30			35			40			45		
	HC	PI	COP	HC	PI	COP	HC	PI	COP	HC	PI	COP
-25/-	7.16	4.55	1.57	6.88	4.82	1.43	6.57	5.21	1.26	6.37	5.57	1.14
-20/-	8.34	4.34	1.92	8.02	4.61	1.74	7.92	4.94	1.60	7.77	5.42	1.43
-15/-	9.19	4.19	2.19	8.83	4.43	1.99	8.62	4.82	1.79	8.48	5.27	1.61
-10/-	10.23	3.95	2.59	9.54	4.06	2.35	9.31	4.33	2.15	9.04	4.86	1.86
-7/-8	10.79	3.74	2.89	9.77	3.82	2.56	9.60	4.01	2.39	9.35	4.32	2.16
2/1	10.96	3.16	3.46	10.69	3.41	3.14	10.58	3.56	2.97	10.43	3.94	2.64
7/6	11.12	2.41	4.62	10.84	2.54	4.26	10.82	3.06	3.54	10.80	3.26	3.32
15/12	11.37	2.35	4.84	11.07	2.44	4.54	10.99	2.89	3.80	10.88	3.15	3.46
20/15	11.58	2.26	5.13	11.29	2.32	4.86	11.18	2.68	4.17	11.07	2.95	3.75
25/18	11.88	2.08	5.71	11.72	2.14	5.48	11.56	2.44	4.74	11.26	2.71	4.15
35/24	12.31	1.87	6.59	12.07	1.99	6.07	11.75	2.23	5.27	11.50	2.50	4.60
OAT	LWT											
	50			55			60			63		
	HC	PI	COP	HC	PI	COP	HC	PI	COP	HC	PI	COP
-25/-	6.26	6.03	1.04									
-20/-	7.52	5.97	1.26	6.75	6.09	1.11						
-15/-	8.32	5.83	1.43	8.02	5.93	1.35	6.39	5.97	1.07			
-10/-	8.75	5.15	1.70	8.51	5.60	1.52	6.58	5.78	1.14			
-7/-8	9.16	4.64	1.97	8.66	4.81	1.80	6.80	5.45	1.25			
2/1	10.29	4.39	2.34	10.03	4.79	2.09	7.10	5.18	1.37			
7/6	10.55	3.69	2.86	10.32	4.07	2.54	8.37	4.91	1.70			
15/12	10.73	3.52	3.05	10.54	3.92	2.69	8.94	4.22	2.12	8.18	4.60	1.78
20/15	10.99	3.19	3.44	10.77	3.46	3.11	9.42	3.83	2.46	8.42	4.41	1.91
25/18	11.10	2.93	3.79	10.98	3.14	3.50	9.72	3.46	2.81			
35/24	11.23	2.66	4.23	11.07	2.90	3.82	10.45	3.25	3.21			

Note:
Heating capacity and power input are not included defrost cycle.
OAT: Outdoor ambient temperature
LWT: Leaving water temperature
HC: Heating capacity
PI: Power input

Cooling

Nominal cooling capacity table:

OAT	LWT											
	25.00			20.00			18.00			15.00		
	CC	PI	COP	CC	PI	COP	CC	PI	COP	CC	PI	COP
-5/-0	12.09	1.03	11.74	11.54	1.06	10.89	10.99	1.08	10.18	10.66	1.18	9.03
0/-	11.74	1.07	10.97	11.31	1.16	9.75	10.67	1.15	9.25	10.35	1.29	8.03
5/-	11.45	1.24	9.23	10.99	1.41	7.79	10.37	1.42	7.30	10.06	1.47	6.84
10/0	11.07	1.53	7.24	10.87	1.67	6.50	10.32	1.71	6.03	10.01	1.80	5.56
15/5	10.96	1.74	6.30	10.78	1.88	5.73	10.25	1.93	5.32	9.94	2.15	4.62
20/10	10.80	1.83	5.90	10.46	1.93	5.42	9.87	1.97	5.00	9.57	2.20	4.34
25/15	10.65	1.92	5.53	10.38	2.03	5.12	9.79	2.08	4.72	9.50	2.32	4.10
30/20	10.39	1.99	5.21	10.01	2.10	4.77	9.45	2.15	4.39	9.16	2.40	3.82
35/24	9.90	2.09	4.75	9.54	2.20	4.34	9.00	2.25	4.00	8.76	2.49	3.52
40/28	9.46	2.11	4.47	9.11	2.23	4.09	8.60	2.28	3.77	8.34	2.55	3.28
45/30	8.56	2.32	3.69	8.43	2.34	3.61	8.02	2.43	3.30	7.71	2.67	2.89
50/33	6.98	2.50	2.79	6.77	2.63	2.57	6.51	2.71	2.40	6.23	2.90	2.15
OAT	LWT											
	10.00			7.00			5.00			-		
	CC	PI	COP	CC	PI	COP	CC	PI	COP	CC	PI	COP
-5/-0	-	-	-	-	-	-	-	-	-	-	-	-
0/-	-	-	-	-	-	-	-	-	-	-	-	-
5/-	-	-	-	-	-	-	-	-	-	-	-	-
10/0	-	-	-	-	-	-	-	-	-	-	-	-
15/5	9.74	2.21	4.40	9.53	2.30	4.14	9.16	2.57	3.56	-	-	-
20/10	9.37	2.28	4.11	9.24	2.37	3.90	8.71	2.65	3.29	-	-	-
25/15	9.30	2.39	3.89	9.11	2.44	3.73	8.67	2.71	3.20	-	-	-
30/20	8.88	2.47	3.60	8.55	2.54	3.37	8.32	2.79	2.98	-	-	-
35/24	8.38	2.56	3.27	8.00	2.67	3.00	7.93	2.87	2.76	-	-	-
40/28	8.17	2.69	3.04	7.74	3.02	2.56	7.62	3.09	2.47	-	-	-
45/30	7.42	2.80	2.65	7.13	3.17	2.25	6.97	3.24	2.15	-	-	-
50/33	5.86	3.07	1.91	5.57	3.43	1.62	5.36	3.55	1.51	-	-	-

Note:
OAT: Outdoor ambient temperature
LWT: Leaving water temperature
CC: Cooling capacity
PI: Power input

Peak cooling capacity table:

OAT	LWT											
	25.00			20.00			18.00			15.00		
	CC	PI	COP	CC	PI	COP	CC	PI	COP	CC	PI	COP
-5/-0	12.81	1.18	10.82	12.23	1.21	10.12	11.65	1.23	9.46	11.30	1.35	8.39
0/-	12.44	1.23	10.11	11.99	1.32	9.07	11.31	1.32	8.60	10.97	1.47	7.47
5/-	12.14	1.43	8.51	11.65	1.61	7.25	10.99	1.62	6.79	10.66	1.68	6.36
10/0	11.73	1.76	6.67	11.52	1.91	6.04	10.94	1.95	5.60	10.61	2.05	5.17
15/5	11.62	2.00	5.81	11.43	2.15	5.33	10.86	2.20	4.95	10.54	2.45	4.30
20/10	11.45	2.11	5.44	11.09	2.20	5.04	10.46	2.25	4.65	10.15	2.51	4.04
25/15	11.29	2.21	5.10	11.00	2.31	4.76	10.38	2.37	4.39	10.07	2.64	3.81
30/20	11.01	2.29	4.81	10.61	2.39	4.43	10.01	2.45	4.09	9.71	2.74	3.55
35/24	10.49	2.40	4.37	10.11	2.51	4.04	9.54	2.57	3.72	9.29	2.84	3.27
40/28	10.03	2.43	4.12	9.66	2.54	3.80	9.11	2.60	3.51	8.84	2.90	3.05
45/30	9.07	2.67	3.40	8.93	2.66	3.35	8.50	2.77	3.07	8.17	3.04	2.69
50/33	7.40	2.88	2.57	7.18	3.00	2.39	6.90	3.09	2.23	6.60	3.31	2.00
OAT	LWT											
	10.00			7.00			5.00			-		
	CC	PI	COP	CC	PI	COP	CC	PI	COP	CC	PI	COP
-5/-0	-	-	-	-	-	-	-	-	-	-	-	-
0/-	-	-	-	-	-	-	-	-	-	-	-	-
5/-	-	-	-	-	-	-	-	-	-	-	-	-
10/0	-	-	-	-	-	-	-	-	-	-	-	-
15/5	10.32	2.52	4.10	10.10	2.62	3.85	9.71	2.96	3.29	-	-	-
20/10	9.94	2.60	3.82	9.79	2.70	3.63	9.23	3.05	3.03	-	-	-
25/15	9.86	2.72	3.62	9.65	2.78	3.47	9.19	3.12	2.95	-	-	-
30/20	9.41	2.82	3.34	9.06	2.90	3.13	8.82	3.21	2.75	-	-	-
35/24	8.88	2.92	3.04	8.48	3.04	2.79	8.41	3.30	2.55	-	-	-
40/28	8.66	3.07	2.82	8.20	3.45	2.38	8.08	3.55	2.27	-	-	-
45/30	7.87	3.19	2.46	7.56	3.61	2.09	7.39	3.73	1.98	-	-	-
50/33	6.21	3.50	1.77	5.90	3.91	1.51	5.68	4.08	1.39	-	-	-

Note:
OAT: Outdoor ambient temperature
LWT: Leaving water temperature
CC: Cooling capacity
PI: Power input

Model: 12kW
Heating
Nominal heating capacity table:

OAT	LWT											
	30			35			40			45		
	HC	PI	COP	HC	PI	COP	HC	PI	COP	HC	PI	COP
-25/-	7.32	4.47	1.64	7.00	4.74	1.48	6.78	5.13	1.32	6.60	5.48	1.20
-20/-	9.44	4.27	2.21	9.01	4.53	1.99	8.76	4.86	1.80	8.52	5.33	1.60
-15/-	10.37	4.12	2.52	10.16	4.36	2.33	10.01	4.74	2.11	9.77	5.18	1.88
-10/-	11.59	3.91	2.97	11.23	4.29	2.62	10.30	4.26	2.42	10.00	4.78	2.09
-7/-8	12.04	3.77	3.19	11.97	4.20	2.85	11.47	4.32	2.66	10.75	4.45	2.42
2/1	12.19	3.23	3.77	12.01	3.53	3.40	11.84	3.62	3.27	11.40	3.88	2.94
7/6	12.31	2.37	5.19	12.06	2.51	4.80	12.02	3.00	4.00	12.00	3.38	3.55
15/12	12.58	2.31	5.44	12.25	2.40	5.10	12.16	2.84	4.28	12.07	3.09	3.90
20/15	12.82	2.22	5.77	12.49	2.28	5.47	12.37	2.64	4.69	12.25	2.90	4.22
25/18	13.15	2.04	6.43	12.97	2.10	6.16	12.79	2.40	5.33	12.46	2.67	4.67
35/24	13.63	1.84	7.42	13.36	1.96	6.83	13.00	2.19	5.93	12.73	2.46	5.18
OAT	LWT											
	50			55			60			63		
	HC	PI	COP	HC	PI	COP	HC	PI	COP	HC	PI	COP
-25/-	6.48	6.02	1.08									
-20/-	8.36	5.87	1.42	7.47	5.99	1.25						
-15/-	9.20	5.73	1.61	8.87	5.83	1.52	6.81	5.87	1.16			
-10/-	9.68	5.07	1.91	9.42	5.50	1.71	7.08	5.69	1.24			
-7/-8	10.31	4.66	2.21	9.98	4.87	2.05	7.20	5.36	1.34			
2/1	11.17	4.32	2.59	11.00	4.49	2.45	7.86	5.10	1.54			
7/6	11.71	3.63	3.22	11.51	4.04	2.85	9.26	4.83	1.92			
15/12	12.01	3.46	3.47	11.93	3.86	3.09	9.89	4.24	2.33	9.05	4.44	2.04
20/15	12.16	3.14	3.87	12.06	3.41	3.54	10.43	3.76	2.77	9.32	4.27	2.19
25/18	12.28	2.88	4.27	12.16	3.08	3.94	10.76	3.41	3.16			
35/24	12.43	2.61	4.76	12.25	2.85	4.30	11.56	3.20	3.61			

Note:
Nominal heating capacity and power input are included defrost cycle.
OAT: Outdoor ambient temperature
LWT: Leaving water temperature
HC: Heating capacity
PI: Power input

Average heating capacity table:

OAT	LWT											
	30			35			40			45		
	HC	PI	COP	HC	PI	COP	HC	PI	COP	HC	PI	COP
-25/-	6.87	4.64	1.48	6.60	4.92	1.34	6.31	5.32	1.19	6.12	5.69	1.08
-20/-	8.01	4.43	1.81	7.70	4.70	1.64	7.60	5.04	1.51	7.45	5.53	1.35
-15/-	8.82	4.27	2.07	8.48	4.52	1.88	8.28	4.92	1.68	8.14	5.38	1.51
-10/-	9.82	4.03	2.44	9.16	4.14	2.21	8.94	4.42	2.02	8.68	4.95	1.75
-7/-8	10.36	3.81	2.72	9.38	3.90	2.41	9.22	4.09	2.25	8.98	4.41	2.04
2/1	10.52	3.23	3.26	10.26	3.48	2.95	10.16	3.63	2.80	10.01	4.02	2.49
7/6	11.12	2.41	4.62	10.84	2.54	4.26	10.82	3.06	3.54	10.80	3.26	3.32
15/12	11.37	2.35	4.84	11.07	2.44	4.54	10.99	2.89	3.80	10.88	3.15	3.46
20/15	11.58	2.26	5.13	11.29	2.32	4.86	11.18	2.68	4.17	11.07	2.95	3.75
25/18	11.88	2.08	5.71	11.72	2.14	5.48	11.56	2.44	4.74	11.26	2.71	4.15
35/24	12.31	1.87	6.59	12.07	1.99	6.07	11.75	2.23	5.27	11.50	2.50	4.60
OAT	LWT											
	50			55			60			63		
	HC	PI	COP	HC	PI	COP	HC	PI	COP	HC	PI	COP
-25/-	6.01	6.15	0.98									
-20/-	7.22	6.09	1.19	6.48	6.21	1.04						
-15/-	7.98	5.94	1.34	7.70	6.05	1.27	6.13	6.08	1.01			
-10/-	8.40	5.26	1.60	8.17	5.71	1.43	6.32	5.90	1.07			
-7/-8	8.79	4.73	1.86	8.32	4.91	1.69	6.53	5.56	1.17			
2/1	9.88	4.48	2.21	9.63	4.88	1.97	6.82	5.29	1.29			
7/6	10.55	3.69	2.86	10.32	4.07	2.54	8.37	4.91	1.70			
15/12	10.73	3.52	3.05	10.54	3.92	2.69	8.94	4.22	2.12	8.18	4.60	1.78
20/15	10.99	3.19	3.44	10.77	3.46	3.11	9.42	3.83	2.46	8.42	4.41	1.91
25/18	11.10	2.93	3.79	10.98	3.14	3.50	9.72	3.46	2.81			
35/24	11.23	2.66	4.23	11.07	2.90	3.82	10.45	3.25	3.21			

Note:
Heating capacity and power input are included defrost cycle.
OAT: Outdoor ambient temperature
LWT: Leaving water temperature
HC: Heating capacity
PI: Power input

Peak heating capacity table:

OAT	LWT											
	30			35			40			45		
	HC	PI	COP	HC	PI	COP	HC	PI	COP	HC	PI	COP
-25/-	8.26	5.06	1.63	7.77	5.36	1.45	7.53	5.79	1.30	7.30	6.19	1.18
-20/-	10.20	4.82	2.12	9.73	5.12	1.90	9.46	5.49	1.72	9.20	6.03	1.53
-15/-	11.20	4.65	2.41	10.97	4.92	2.23	10.81	5.36	2.02	10.55	5.86	1.80
-10/-	12.52	4.42	2.83	12.13	4.85	2.50	11.13	4.81	2.31	10.80	5.40	2.00
-7/-8	13.00	4.26	3.05	12.57	4.75	2.65	12.39	4.88	2.54	11.61	5.03	2.31
2/1	13.17	3.65	3.61	12.86	3.99	3.22	12.64	4.09	3.09	12.31	4.38	2.81
7/6	13.30	2.68	4.96	13.02	2.84	4.59	12.98	3.40	3.82	12.73	3.82	3.33
15/12	13.59	2.61	5.20	13.23	2.71	4.88	13.13	3.21	4.09	12.98	3.50	3.71
20/15	13.84	2.51	5.51	13.49	2.58	5.23	13.36	2.98	4.48	13.23	3.28	4.03
25/18	14.20	2.31	6.15	14.01	2.38	5.89	13.81	2.71	5.09	13.46	3.01	4.47
35/24	14.53	2.08	7.00	14.36	2.21	6.50	14.04	2.48	5.67	13.75	2.78	4.95
OAT	LWT											
	50			55			60			63		
	HC	PI	COP	HC	PI	COP	HC	PI	COP	HC	PI	COP
-25/-	7.15	6.74	1.06									
-20/-	8.95	6.58	1.36	8.33	6.76	1.23						
-15/-	9.85	6.42	1.53	9.50	6.59	1.44	7.38	6.63	1.11			
-10/-	10.36	5.68	1.83	10.08	6.22	1.62	7.76	6.43	1.21			
-7/-8	11.03	5.22	2.11	10.68	5.50	1.94	8.21	6.06	1.35			
2/1	11.95	4.83	2.47	11.72	5.07	2.31	9.04	5.76	1.57			
7/6	12.53	4.07	3.08	12.19	4.56	2.67	9.91	5.46	1.82			
15/12	12.77	3.88	3.29	12.56	4.36	2.88	10.58	4.79	2.21	9.47	5.19	1.82
20/15	13.01	3.52	3.70	12.90	3.85	3.35	11.16	4.25	2.62	9.89	4.93	2.01
25/18	13.14	3.22	4.08	13.01	3.48	3.73	11.51	3.85	2.99			
35/24	13.30	2.93	4.54	13.11	3.22	4.07	12.17	3.62	3.37			

Note:
Heating capacity and power input are not included defrost cycle.
OAT: Outdoor ambient temperature
LWT: Leaving water temperature
HC: Heating capacity
PI: Power input

Cooling

Nominal cooling capacity table:

OAT	LWT											
	25.00			20.00			18.00			15.00		
	CC	PI	COP	CC	PI	COP	CC	PI	COP	CC	PI	COP
-5/-0	14.36	1.17	12.27	13.97	1.26	11.06	13.43	1.33	10.10	13.03	1.54	8.46
0/-	14.03	1.31	10.73	13.75	1.38	9.98	13.04	1.58	8.25	12.65	1.75	7.23
5/-	13.79	1.61	8.57	13.43	1.69	7.92	12.67	1.73	7.30	12.29	1.94	6.35
10/0	13.60	1.89	7.20	13.37	2.04	6.54	12.61	2.09	6.03	12.23	2.34	5.24
15/5	13.38	2.18	6.13	13.28	2.30	5.77	12.52	2.35	5.32	12.15	2.57	4.73
20/10	13.22	2.24	5.91	12.78	2.36	5.42	12.06	2.41	5.00	11.70	2.69	4.34
25/15	13.06	2.35	5.55	12.69	2.48	5.12	11.97	2.54	4.72	11.61	2.83	4.10
30/20	12.70	2.44	5.21	12.24	2.57	4.77	11.55	2.63	4.39	11.20	2.93	3.82
35/24	12.10	2.55	4.75	11.66	2.69	4.34	11.00	2.75	4.00	10.87	3.07	3.54
40/28	11.26	2.62	4.30	10.89	2.77	3.93	10.51	2.82	3.73	10.19	3.11	3.28
45/30	10.49	2.86	3.67	9.97	2.96	3.37	9.72	3.06	3.18	9.43	3.26	2.89
50/33	9.23	3.03	3.05	8.91	3.24	2.75	8.56	3.31	2.59	8.15	3.53	2.31
OAT	LWT											
	10.00			7.00			5.00			-		
	CC	PI	COP	CC	PI	COP	CC	PI	COP	CC	PI	COP
-5/-0	-	-	-	-	-	-	-	-	-	-	-	-
0/-	-	-	-	-	-	-	-	-	-	-	-	-
5/-	-	-	-	-	-	-	-	-	-	-	-	-
10/0	-	-	-	-	-	-	-	-	-	-	-	-
15/5	11.90	2.86	4.16	11.65	3.12	3.73	11.27	3.19	3.53	-	-	-
20/10	11.46	3.01	3.81	11.22	3.20	3.51	10.85	3.27	3.32	-	-	-
25/15	11.37	3.16	3.60	11.13	3.36	3.31	10.77	3.44	3.13	-	-	-
30/20	10.97	3.27	3.35	10.92	3.61	3.02	10.39	3.66	2.84	-	-	-
35/24	10.63	3.48	3.05	10.50	3.82	2.75	9.90	3.87	2.56	-	-	-
40/28	9.98	3.53	2.83	9.82	3.91	2.51	9.46	4.01	2.36	-	-	-
45/30	9.23	3.64	2.53	9.04	4.02	2.25	8.75	4.14	2.11	-	-	-
50/33	7.87	3.90	2.02	7.69	4.19	1.83	7.57	4.31	1.76	-	-	-

Note:
OAT: Outdoor ambient temperature
LWT: Leaving water temperature
CC: Cooling capacity
PI: Power input

Peak cooling capacity table:

OAT	LWT											
	25.00			20.00			18.00			15.00		
	CC	PI	COP	CC	PI	COP	CC	PI	COP	CC	PI	COP
-5/-0	15.08	1.29	11.72	14.67	1.39	10.56	14.10	1.46	9.64	13.68	1.69	8.07
0/-	14.73	1.44	10.24	14.44	1.52	9.53	13.69	1.74	7.88	13.28	1.93	6.90
5/-	14.48	1.77	8.18	14.10	1.86	7.56	13.30	1.91	6.97	12.91	2.13	6.06
10/0	14.28	2.08	6.87	14.03	2.25	6.24	13.24	2.30	5.75	12.84	2.57	5.00
15/5	14.05	2.40	5.85	13.94	2.53	5.51	13.15	2.59	5.08	12.76	2.83	4.51
20/10	13.88	2.46	5.64	13.42	2.59	5.18	12.66	2.65	4.77	12.28	2.96	4.14
25/15	13.71	2.59	5.30	13.32	2.73	4.89	12.57	2.79	4.50	12.19	3.12	3.91
30/20	13.34	2.68	4.98	12.85	2.82	4.55	12.12	2.89	4.20	11.76	3.23	3.64
35/24	12.71	2.80	4.53	12.24	2.96	4.14	11.55	3.03	3.82	11.41	3.38	3.38
40/28	11.82	2.88	4.10	11.43	3.05	3.75	11.03	3.10	3.56	10.70	3.42	3.13
45/30	11.01	3.15	3.50	10.47	3.26	3.22	10.20	3.37	3.03	9.90	3.59	2.76
50/33	9.69	3.33	2.91	9.36	3.56	2.63	8.99	3.64	2.47	8.56	3.88	2.21
OAT	LWT											
	10.00			7.00			5.00			-		
	CC	PI	COP	CC	PI	COP	CC	PI	COP	CC	PI	COP
-5/-0	-	-	-	-	-	-	-	-	-	-	-	-
0/-	-	-	-	-	-	-	-	-	-	-	-	-
5/-	-	-	-	-	-	-	-	-	-	-	-	-
10/0	-	-	-	-	-	-	-	-	-	-	-	-
15/5	12.49	3.15	3.97	12.23	3.43	3.56	11.84	3.51	3.37	-	-	-
20/10	12.03	3.31	3.64	11.78	3.52	3.35	11.40	3.60	3.17	-	-	-
25/15	11.94	3.48	3.43	11.69	3.70	3.16	11.31	3.78	2.99	-	-	-
30/20	11.52	3.60	3.20	11.46	3.97	2.89	10.91	4.03	2.71	-	-	-
35/24	11.16	3.83	2.92	11.03	4.20	2.63	10.40	4.26	2.44	-	-	-
40/28	10.48	3.88	2.70	10.31	4.30	2.40	9.93	4.41	2.25	-	-	-
45/30	9.69	4.01	2.42	9.49	4.42	2.15	9.18	4.55	2.02	-	-	-
50/33	8.26	4.29	1.93	8.07	4.61	1.75	7.94	4.74	1.68	-	-	-

Note:
OAT: Outdoor ambient temperature
LWT: Leaving water temperature
CC: Cooling capacity
PI: Power input

Model: 14kW
Heating
Nominal heating capacity table:

OAT	LWT											
	30			35			40			45		
	HC	PI	COP	HC	PI	COP	HC	PI	COP	HC	PI	COP
-25/-	8.54	5.33	1.60	8.17	5.65	1.45	7.91	6.11	1.30	7.70	6.53	1.18
-20/-	11.02	5.09	2.17	10.36	5.40	1.92	10.22	5.79	1.76	10.08	6.36	1.59
-15/-	12.10	4.91	2.46	11.85	5.19	2.28	11.68	5.65	2.07	11.40	6.18	1.84
-10/-	12.88	4.63	2.78	12.34	4.76	2.59	11.82	5.13	2.30	11.52	5.67	2.03
-7/-8	13.28	4.38	3.03	12.52	4.47	2.80	12.07	4.70	2.57	11.60	4.82	2.41
2/1	14.01	3.71	3.78	13.70	4.03	3.40	13.14	4.24	3.10	12.77	4.50	2.84
7/6	14.36	2.83	5.08	14.04	2.99	4.70	14.01	3.58	3.91	13.99	3.94	3.55
15/12	14.68	2.75	5.33	14.29	2.86	5.00	14.19	3.39	4.18	14.08	3.63	3.88
20/15	14.96	2.65	5.65	14.57	2.72	5.36	14.43	3.14	4.59	14.29	3.46	4.13
25/18	15.34	2.44	6.29	15.13	2.51	6.03	14.92	2.86	5.22	14.54	3.18	4.57
35/24	15.54	2.19	7.10	15.23	2.33	6.53	15.16	2.61	5.80	14.85	2.93	5.07
OAT	LWT											
	50			55			60			63		
	HC	PI	COP	HC	PI	COP	HC	PI	COP	HC	PI	COP
-25/-	7.56	7.17	1.05									
-20/-	9.90	7.00	1.41	8.72	7.14	1.22						
-15/-	10.74	6.83	1.57	9.78	6.95	1.41	7.95	6.99	1.14			
-10/-	10.88	5.81	1.87	10.04	6.13	1.64	8.26	6.78	1.22			
-7/-8	11.03	4.98	2.21	10.50	5.25	2.00	8.40	6.39	1.31			
2/1	12.36	4.71	2.62	11.98	4.99	2.40	9.17	6.07	1.51			
7/6	13.03	4.03	3.23	12.05	4.38	2.75	10.81	5.76	1.88			
15/12	13.60	3.77	3.61	13.32	4.17	3.19	11.54	4.94	2.33	10.56	5.30	1.99
20/15	14.19	3.69	3.85	13.84	4.06	3.41	12.17	4.49	2.71	10.88	5.09	2.14
25/18	14.33	3.43	4.18	14.18	3.67	3.86	12.55	4.06	3.09			
35/24	14.50	3.11	4.66	14.29	3.39	4.21	13.49	3.81	3.54			

Note:
Nominal heating capacity and power input are included defrost cycle.
OAT: Outdoor ambient temperature
LWT: Leaving water temperature
HC: Heating capacity
PI: Power input

Average heating capacity table:

OAT	LWT											
	30			35			40			45		
	HC	PI	COP	HC	PI	COP	HC	PI	COP	HC	PI	COP
-25/-	9.17	6.20	1.48	8.76	6.57	1.33	8.52	7.10	1.20	8.33	7.60	1.10
-20/-	11.42	5.91	1.93	10.74	6.28	1.71	10.60	6.73	1.57	10.45	7.39	1.41
-15/-	12.54	5.71	2.20	12.29	6.04	2.04	12.11	6.57	1.84	11.82	7.19	1.64
-10/-	13.35	5.38	2.48	12.79	5.53	2.31	12.25	5.97	2.05	11.94	6.59	1.81
-7/-8	13.77	5.09	2.70	12.98	5.20	2.50	12.51	5.47	2.29	12.03	5.60	2.15
2/1	14.53	4.31	3.37	13.82	4.69	2.95	13.47	4.93	2.73	13.24	5.23	2.53
7/6	15.51	3.22	4.82	15.16	3.41	4.45	14.93	4.08	3.66	14.68	4.49	3.27
15/12	15.85	3.14	5.05	15.44	3.26	4.73	15.32	3.87	3.96	15.21	4.14	3.68
20/15	16.15	3.02	5.35	15.74	3.10	5.08	15.59	3.58	4.35	15.44	3.95	3.91
25/18	16.57	2.78	5.96	16.34	2.86	5.72	16.11	3.26	4.94	15.70	3.62	4.33
35/24	16.78	2.50	6.72	16.45	2.66	6.19	16.38	2.98	5.50	16.04	3.34	4.80
OAT	LWT											
	50			55			60			63		
	HC	PI	COP	HC	PI	COP	HC	PI	COP	HC	PI	COP
-25/-	8.19	8.26	0.99									
-20/-	10.26	8.14	1.26	8.95	8.37	1.07						
-15/-	11.13	7.94	1.40	10.05	8.15	1.23	8.57	8.20	1.05			
-10/-	11.28	6.76	1.67	10.31	7.19	1.43	8.74	7.95	1.10			
-7/-8	11.44	5.79	1.97	10.79	6.16	1.75	9.01	7.50	1.20			
2/1	12.81	5.48	2.34	12.06	5.86	2.06	9.42	7.13	1.32			
7/6	14.07	4.59	3.06	12.89	5.04	2.56	11.56	6.62	1.75			
15/12	14.69	4.30	3.42	14.25	4.80	2.97	12.35	5.69	2.17	11.30	6.04	1.87
20/15	15.32	4.21	3.64	14.81	4.67	3.17	13.02	5.16	2.52	11.64	5.80	2.01
25/18	15.47	3.91	3.96	15.17	4.23	3.59	13.43	4.67	2.88			
35/24	15.66	3.55	4.41	15.29	3.90	3.92	14.44	4.39	3.29			

Note:
Heating capacity and power input are included defrost cycle.
OAT: Outdoor ambient temperature
LWT: Leaving water temperature
HC: Heating capacity
PI: Power input

Peak heating capacity table:

OAT	LWT											
	30			35			40			45		
	HC	PI	COP	HC	PI	COP	HC	PI	COP	HC	PI	COP
-25/-	9.55	6.08	1.57	9.13	6.44	1.42	8.87	6.97	1.27	8.56	7.45	1.15
-20/-	11.90	5.80	2.05	11.19	6.16	1.82	11.04	6.60	1.67	10.89	7.25	1.50
-15/-	13.06	5.60	2.33	12.80	5.92	2.16	12.61	6.44	1.96	12.31	7.05	1.75
-10/-	13.91	5.27	2.64	13.33	5.42	2.46	12.77	5.85	2.18	12.44	6.46	1.92
-7/-8	14.34	4.99	2.87	13.52	5.10	2.65	13.04	5.36	2.43	12.53	5.49	2.28
2/1	15.13	4.23	3.58	14.40	4.59	3.13	14.03	4.83	2.90	13.79	5.13	2.69
7/6	15.51	3.22	4.82	15.16	3.41	4.45	14.93	4.08	3.66	14.68	4.49	3.27
15/12	15.85	3.14	5.05	15.44	3.26	4.73	15.32	3.87	3.96	15.21	4.14	3.68
20/15	16.15	3.02	5.35	15.74	3.10	5.08	15.59	3.58	4.35	15.44	3.95	3.91
25/18	16.57	2.78	5.96	16.34	2.86	5.72	16.11	3.26	4.94	15.70	3.62	4.33
35/24	16.78	2.50	6.72	16.45	2.66	6.19	16.38	2.98	5.50	16.04	3.34	4.80
OAT	LWT											
	50			55			60			63		
	HC	PI	COP	HC	PI	COP	HC	PI	COP	HC	PI	COP
-25/-	8.45	8.10	1.04									
-20/-	10.69	7.98	1.34	9.33	8.21	1.14						
-15/-	11.60	7.78	1.49	10.46	7.99	1.31	8.93	8.04	1.11			
-10/-	11.75	6.62	1.77	10.74	7.05	1.52	9.10	7.80	1.17			
-7/-8	11.91	5.68	2.10	11.24	6.04	1.86	9.39	7.35	1.28			
2/1	13.35	5.37	2.49	12.56	5.74	2.19	9.81	6.99	1.40			
7/6	14.07	4.59	3.06	12.89	5.04	2.56	11.56	6.62	1.75			
15/12	14.69	4.30	3.42	14.25	4.80	2.97	12.35	5.69	2.17	11.30	6.04	1.87
20/15	15.32	4.21	3.64	14.81	4.67	3.17	13.02	5.16	2.52	11.64	5.80	2.01
25/18	15.47	3.91	3.96	15.17	4.23	3.59	13.43	4.67	2.88			
35/24	15.66	3.55	4.41	15.29	3.90	3.92	14.44	4.39	3.29			

Note:
Heating capacity and power input are not included defrost cycle.
OAT: Outdoor ambient temperature
LWT: Leaving water temperature
HC: Heating capacity
PI: Power input

Cooling

Nominal cooling capacity table:

OAT	LWT											
	25.00			20.00			18.00			15.00		
	CC	PI	COP	CC	PI	COP	CC	PI	COP	CC	PI	COP
-5/-0	17.56	1.58	11.11	17.37	1.62	10.72	16.68	1.65	10.11	15.99	1.81	8.83
0/-	16.94	1.72	9.85	16.50	1.79	9.22	16.03	1.83	8.76	15.52	1.98	7.86
5/-	16.59	2.02	8.22	16.17	2.09	7.74	15.55	2.18	7.15	15.08	2.43	6.21
10/0	16.20	2.39	6.78	15.89	2.48	6.41	15.48	2.63	5.89	15.01	2.93	5.12
15/5	15.96	2.74	5.83	15.73	2.89	5.45	15.37	2.95	5.20	14.91	3.30	4.52
20/10	15.83	2.81	5.64	15.65	2.96	5.29	14.80	3.03	4.89	14.54	3.38	4.30
25/15	15.61	2.95	5.29	15.39	3.11	4.95	14.69	3.18	4.61	14.25	3.52	4.05
30/20	15.16	3.06	4.96	15.02	3.22	4.66	14.17	3.30	4.30	13.59	3.68	3.69
35/24	14.85	3.20	4.64	14.31	3.37	4.25	13.50	3.45	3.91	13.07	3.95	3.31
40/28	14.19	3.24	4.38	13.67	3.42	4.00	12.90	3.50	3.69	12.51	4.01	3.12
45/30	12.88	3.40	3.79	12.19	3.58	3.40	11.70	3.67	3.19	11.16	4.13	2.70
50/33	10.98	3.68	2.99	10.63	3.87	2.74	10.29	3.97	2.59	9.92	4.43	2.24
OAT	LWT											
	10.00			7.00			5.00			-		
	CC	PI	COP	CC	PI	COP	CC	PI	COP	CC	PI	COP
-5/-0	-	-	-	-	-	-	-	-	-	-	-	-
0/-	-	-	-	-	-	-	-	-	-	-	-	-
5/-	-	-	-	-	-	-	-	-	-	-	-	-
10/0	-	-	-	-	-	-	-	-	-	-	-	-
15/5	14.43	3.68	3.92	14.17	3.92	3.62	13.83	4.00	3.45	-	-	-
20/10	13.88	3.77	3.68	13.69	4.01	3.41	13.34	4.10	3.25	-	-	-
25/15	13.50	3.97	3.40	13.06	4.22	3.09	13.22	4.32	3.06	-	-	-
30/20	12.93	4.11	3.15	12.62	4.37	2.89	12.30	4.58	2.69	-	-	-
35/24	12.68	4.36	2.91	12.00	4.44	2.70	11.86	4.82	2.46	-	-	-
40/28	11.99	4.47	2.68	11.56	4.79	2.41	11.05	5.09	2.17	-	-	-
45/30	10.95	4.62	2.37	10.74	5.08	2.11	10.13	5.28	1.92	-	-	-
50/33	9.64	4.94	1.95	9.30	5.32	1.75	8.89	5.41	1.64	-	-	-

Note:
OAT: Outdoor ambient temperature
LWT: Leaving water temperature
CC: Cooling capacity
PI: Power input

Peak cooling capacity table:

OAT	LWT											
	25.00			20.00			18.00			15.00		
	CC	PI	COP	CC	PI	COP	CC	PI	COP	CC	PI	COP
-5/-0	18.44	1.74	10.61	18.24	1.78	10.23	17.51	1.82	9.65	16.79	1.99	8.43
0/-	17.79	1.89	9.40	17.33	1.97	8.80	16.83	2.01	8.36	16.30	2.17	7.50
5/-	17.42	2.22	7.85	16.98	2.30	7.39	16.33	2.39	6.82	15.84	2.67	5.93
10/0	17.01	2.63	6.47	16.68	2.73	6.12	16.25	2.89	5.63	15.76	3.22	4.89
15/5	16.76	3.01	5.56	16.52	3.17	5.20	16.14	3.25	4.97	15.66	3.63	4.32
20/10	16.62	3.09	5.38	16.43	3.25	5.05	15.54	3.33	4.67	15.27	3.72	4.11
25/15	16.39	3.25	5.05	16.16	3.42	4.72	15.42	3.50	4.40	14.96	3.87	3.86
30/20	15.92	3.36	4.74	15.77	3.54	4.45	14.88	3.63	4.10	14.27	4.05	3.53
35/24	15.59	3.52	4.43	15.03	3.71	4.05	14.18	3.79	3.74	13.72	4.35	3.16
40/28	14.90	3.57	4.18	14.35	3.76	3.82	13.54	3.85	3.52	13.14	4.41	2.98
45/30	13.52	3.74	3.62	12.80	3.94	3.25	12.29	4.03	3.05	11.72	4.54	2.58
50/33	11.53	4.04	2.85	11.16	4.26	2.62	10.80	4.36	2.48	10.42	4.87	2.14
OAT	LWT											
	10.00			7.00			5.00			-		
	CC	PI	COP	CC	PI	COP	CC	PI	COP	CC	PI	COP
-5/-0	-	-	-	-	-	-	-	-	-	-	-	-
0/-	-	-	-	-	-	-	-	-	-	-	-	-
5/-	-	-	-	-	-	-	-	-	-	-	-	-
10/0	-	-	-	-	-	-	-	-	-	-	-	-
15/5	15.15	4.05	3.74	14.88	4.27	3.49	14.53	4.41	3.30	-	-	-
20/10	14.57	4.15	3.51	14.37	4.38	3.29	14.01	4.52	3.10	-	-	-
25/15	14.18	4.36	3.25	13.71	4.60	2.98	13.88	4.75	2.92	-	-	-
30/20	13.58	4.52	3.01	13.25	4.76	2.78	12.92	5.04	2.56	-	-	-
35/24	13.31	4.80	2.78	12.60	4.84	2.60	12.45	5.30	2.35	-	-	-
40/28	12.59	4.92	2.56	12.14	5.22	2.32	11.60	5.60	2.07	-	-	-
45/30	11.50	5.08	2.26	11.28	5.54	2.04	10.64	5.81	1.83	-	-	-
50/33	10.12	5.44	1.86	9.77	5.80	1.68	9.33	5.95	1.57	-	-	-

Note:
OAT: Outdoor ambient temperature
LWT: Leaving water temperature
CC: Cooling capacity
PI: Power input

Model: 16kW
Heating
Nominal heating capacity table:

OAT	LWT											
	30			35			40			45		
	HC	PI	COP	HC	PI	COP	HC	PI	COP	HC	PI	COP
-25/-	10.78	6.14	1.76	10.20	6.50	1.57	9.69	7.03	1.38	9.14	7.52	1.22
-20/-	12.59	5.85	2.15	11.84	6.22	1.90	11.68	6.66	1.75	11.52	7.31	1.58
-15/-	13.82	5.65	2.45	13.55	5.97	2.27	13.35	6.50	2.05	13.03	7.11	1.83
-10/-	14.72	5.32	2.77	14.10	5.47	2.58	13.51	5.90	2.29	13.17	6.52	2.02
-7/-8	15.18	4.84	3.14	13.50	5.00	2.70	13.79	5.41	2.55	13.26	5.55	2.39
2/1	15.06	4.27	3.53	14.50	4.39	3.30	15.02	4.88	3.08	14.59	5.18	2.82
7/6	16.21	3.25	4.99	16.04	3.43	4.67	16.01	4.12	3.89	15.97	4.58	3.49
15/12	16.47	3.17	5.20	16.33	3.29	4.96	16.26	3.90	4.17	16.10	4.18	3.85
20/15	16.90	3.05	5.55	16.52	3.13	5.28	16.41	3.62	4.54	16.27	3.98	4.09
25/18	17.24	2.80	6.15	16.88	2.88	5.85	16.56	3.29	5.03	16.42	3.66	4.49
35/24	17.49	2.52	6.94	17.17	2.68	6.40	16.90	3.01	5.62	16.69	3.37	4.95
OAT	LWT											
	50			55			60			63		
	HC	PI	COP	HC	PI	COP	HC	PI	COP	HC	PI	COP
-25/-	8.89	8.25	1.08									
-20/-	11.31	8.05	1.40	9.96	8.21	1.21						
-15/-	12.27	7.56	1.62	11.18	7.91	1.41	9.08	8.05	1.13			
-10/-	12.43	6.68	1.86	11.47	7.05	1.63	9.44	7.80	1.21			
-7/-8	12.61	5.73	2.20	11.50	5.90	1.95	9.60	7.35	1.31			
2/1	14.13	5.42	2.61	13.47	5.73	2.35	10.48	6.99	1.50			
7/6	14.77	4.74	3.12	13.53	4.97	2.72	12.35	6.62	1.86			
15/12	15.45	4.34	3.56	14.42	4.80	3.01	13.19	5.69	2.32	12.07	6.09	1.98
20/15	15.91	4.25	3.75	15.02	4.67	3.22	13.90	5.16	2.69	12.43	5.85	2.12
25/18	16.16	3.95	4.10	15.57	4.23	3.68	14.34	4.67	3.07			
35/24	16.37	3.58	4.57	15.88	3.91	4.07	15.42	4.39	3.51			

Note:
Nominal heating capacity and power input are included defrost cycle.
OAT: Outdoor ambient temperature
LWT: Leaving water temperature
HC: Heating capacity
PI: Power input

Average heating capacity table:

OAT	LWT											
	30			35			40			45		
	HC	PI	COP	HC	PI	COP	HC	PI	COP	HC	PI	COP
-25/-	11.13	7.01	1.59	10.62	7.43	1.43	10.23	8.03	1.27	9.79	8.59	1.14
-20/-	12.81	6.68	1.92	12.05	7.10	1.70	11.89	7.61	1.56	11.72	8.36	1.40
-15/-	14.07	6.45	2.18	13.78	6.82	2.02	13.58	7.43	1.83	13.26	8.12	1.63
-10/-	14.98	6.08	2.46	14.35	6.25	2.30	13.75	6.74	2.04	13.40	7.45	1.80
-7/-8	15.44	5.53	2.79	13.74	5.71	2.41	14.04	6.18	2.27	13.49	6.34	2.13
2/1	15.33	4.87	3.14	14.76	5.02	2.94	15.28	5.57	2.74	14.85	5.91	2.51
7/6	17.18	3.64	4.72	17.00	3.85	4.42	16.89	4.61	3.66	16.43	5.13	3.21
15/12	17.46	3.55	4.92	17.31	3.69	4.70	17.24	4.37	3.95	17.06	4.68	3.65
20/15	17.78	3.41	5.21	17.51	3.50	5.00	17.39	4.05	4.29	17.25	4.46	3.87
25/18	17.99	3.14	5.73	17.80	3.23	5.51	17.55	3.69	4.76	17.41	4.10	4.25
35/24	18.23	2.82	6.46	18.01	3.00	6.00	17.88	3.37	5.31	17.64	3.78	4.67
OAT	LWT											
	50			55			60			63		
	HC	PI	COP	HC	PI	COP	HC	PI	COP	HC	PI	COP
-25/-	9.39	9.37	1.00									
-20/-	11.51	9.20	1.25	10.14	9.38	1.08						
-15/-	12.49	8.64	1.45	11.37	9.04	1.26	9.34	9.19	1.02			
-10/-	12.65	7.64	1.66	11.68	8.06	1.45	9.78	8.91	1.10			
-7/-8	12.92	6.55	1.97	11.70	6.74	1.74	10.13	8.40	1.21			
2/1	14.37	6.19	2.32	13.53	6.54	2.07	10.66	7.98	1.34			
7/6	15.66	5.31	2.95	14.34	5.57	2.57	13.09	7.42	1.76			
15/12	16.38	4.86	3.37	15.29	5.37	2.84	13.98	6.37	2.19	12.44	6.83	1.82
20/15	16.86	4.75	3.55	15.92	5.23	3.04	14.74	5.78	2.55	13.01	6.55	1.99
25/18	17.13	4.42	3.88	16.50	4.74	3.49	15.20	5.23	2.91			
35/24	17.35	4.01	4.32	16.83	4.37	3.85	16.34	4.91	3.33			

Note:
Heating capacity and power input are included defrost cycle.
OAT: Outdoor ambient temperature
LWT: Leaving water temperature
HC: Heating capacity
PI: Power input

Peak heating capacity table:

OAT	LWT											
	30			35			40			45		
	HC	PI	COP	HC	PI	COP	HC	PI	COP	HC	PI	COP
-25/-	11.59	6.87	1.69	11.06	7.28	1.52	10.66	7.87	1.35	10.20	8.42	1.21
-20/-	13.35	6.55	2.04	12.55	6.96	1.80	12.38	7.46	1.66	12.21	8.19	1.49
-15/-	14.65	6.33	2.32	14.36	6.69	2.15	14.15	7.28	1.94	13.81	7.96	1.73
-10/-	15.60	5.96	2.62	14.95	6.13	2.44	14.32	6.61	2.17	13.96	7.31	1.91
-7/-8	16.09	5.42	2.97	14.31	5.60	2.56	14.62	6.06	2.41	14.05	6.21	2.26
2/1	15.96	4.78	3.34	15.37	4.92	3.12	15.92	5.46	2.91	15.47	5.80	2.67
7/6	17.18	3.64	4.72	17.00	3.85	4.42	16.89	4.61	3.66	16.43	5.13	3.21
15/12	17.46	3.55	4.92	17.31	3.69	4.70	17.24	4.37	3.95	17.06	4.68	3.65
20/15	17.78	3.41	5.21	17.51	3.50	5.00	17.39	4.05	4.29	17.25	4.46	3.87
25/18	17.99	3.14	5.73	17.80	3.23	5.51	17.55	3.69	4.76	17.41	4.10	4.25
35/24	18.23	2.82	6.46	18.01	3.00	6.00	17.88	3.37	5.31	17.64	3.78	4.67
OAT	LWT											
	50			55			60			63		
	HC	PI	COP	HC	PI	COP	HC	PI	COP	HC	PI	COP
-25/-	9.78	9.19	1.06									
-20/-	11.99	9.02	1.33	10.56	9.20	1.15						
-15/-	13.01	8.47	1.54	11.85	8.86	1.34	9.73	9.01	1.08			
-10/-	13.18	7.49	1.76	12.16	7.90	1.54	10.19	8.74	1.17			
-7/-8	13.46	6.42	2.10	12.19	6.61	1.85	10.55	8.24	1.28			
2/1	14.97	6.07	2.47	14.09	6.41	2.20	11.11	7.83	1.42			
7/6	15.66	5.31	2.95	14.34	5.57	2.57	13.09	7.42	1.76			
15/12	16.38	4.86	3.37	15.29	5.37	2.84	13.98	6.37	2.19	12.44	6.83	1.82
20/15	16.86	4.75	3.55	15.92	5.23	3.04	14.74	5.78	2.55	13.01	6.55	1.99
25/18	17.13	4.42	3.88	16.50	4.74	3.49	15.20	5.23	2.91			
35/24	17.35	4.01	4.32	16.83	4.37	3.85	16.34	4.91	3.33			

Note:
Heating capacity and power input are not included defrost cycle.
OAT: Outdoor ambient temperature
LWT: Leaving water temperature
HC: Heating capacity
PI: Power input

Cooling:

Nominal cooling capacity table:

OAT	LWT											
	25.00			20.00			18.00			15.00		
	CC	PI	COP	CC	PI	COP	CC	PI	COP	CC	PI	COP
-5/-0	17.80	1.62	10.99	17.46	1.75	9.95	16.73	1.80	9.32	16.58	2.00	8.27
0/-	17.32	1.76	9.84	16.93	1.91	8.85	16.56	1.96	8.45	16.16	2.19	7.39
5/-	16.97	2.13	7.97	16.59	2.35	7.05	16.11	2.41	6.69	15.88	2.72	5.84
10/0	16.34	2.52	6.48	15.88	2.84	5.59	15.69	2.91	5.40	15.43	3.25	4.75
15/5	16.01	2.98	5.37	15.39	3.20	4.82	15.18	3.27	4.64	15.05	3.58	4.20
20/10	15.65	3.11	5.04	15.14	3.28	4.62	14.97	3.35	4.47	14.86	3.74	3.97
25/15	15.37	3.27	4.70	14.91	3.44	4.33	14.82	3.52	4.20	14.70	3.94	3.74
30/20	15.31	3.38	4.52	14.83	3.64	4.07	14.66	3.65	4.02	14.52	4.03	3.60
35/24	15.05	3.54	4.25	14.70	3.73	3.94	14.50	3.82	3.80	14.39	4.17	3.45
40/28	14.59	3.59	4.07	14.27	3.78	3.77	13.89	3.87	3.59	13.44	4.32	3.11
45/30	13.26	3.76	3.52	12.83	3.97	3.23	12.42	4.08	3.04	12.01	4.53	2.65
50/33	11.68	4.07	2.87	11.26	4.29	2.62	11.08	4.39	2.52	10.75	4.90	2.19
OAT	LWT											
	10.00			7.00			5.00			-		
	CC	PI	COP	CC	PI	COP	CC	PI	COP	CC	PI	COP
-5/-0	-	-	-	-	-	-	-	-	-	-	-	-
0/-	-	-	-	-	-	-	-	-	-	-	-	-
5/-	-	-	-	-	-	-	-	-	-	-	-	-
10/0	-	-	-	-	-	-	-	-	-	-	-	-
15/5	14.98	4.01	3.74	14.83	4.34	3.42	14.41	4.43	3.25	-	-	-
20/10	14.77	4.15	3.56	14.68	4.44	3.30	14.06	4.55	3.09	-	-	-
25/15	14.61	4.36	3.35	14.49	4.67	3.10	13.76	4.71	2.92	-	-	-
30/20	14.44	4.51	3.20	14.22	4.81	2.96	13.47	4.92	2.74	-	-	-
35/24	14.23	4.76	2.99	14.00	5.28	2.65	13.20	5.39	2.45	-	-	-
40/28	12.88	4.85	2.66	12.51	5.38	2.33	12.07	5.47	2.21	-	-	-
45/30	11.57	5.06	2.29	11.29	5.49	2.06	10.83	5.56	1.95	-	-	-
50/33	10.26	5.47	1.88	9.96	5.75	1.73	9.53	5.95	1.60	-	-	-

Note:
OAT: Outdoor ambient temperature
LWT: Leaving water temperature
CC: Cooling capacity
PI: Power input

Peak cooling capacity table:

OAT	LWT											
	25.00			20.00			18.00			15.00		
	CC	PI	COP	CC	PI	COP	CC	PI	COP	CC	PI	COP
-5/-0	18.87	1.81	10.40	18.51	1.96	9.42	17.73	2.01	8.82	18.57	2.23	8.34
0/-	18.36	1.97	9.31	17.95	2.14	8.37	17.55	2.19	8.00	18.10	2.43	7.45
5/-	17.99	2.39	7.54	17.59	2.64	6.67	17.08	2.70	6.33	17.79	3.02	5.89
10/0	17.32	2.82	6.14	16.83	3.18	5.29	16.63	3.26	5.11	17.28	3.60	4.80
15/5	16.97	3.34	5.08	16.31	3.58	4.56	16.09	3.66	4.39	16.86	3.97	4.24
20/10	16.59	3.48	4.77	16.05	3.67	4.38	15.87	3.75	4.23	16.64	4.15	4.01
25/15	16.29	3.66	4.45	15.80	3.86	4.10	15.71	3.95	3.98	16.46	4.37	3.77
30/20	16.23	3.79	4.28	15.72	4.08	3.86	15.54	4.09	3.80	16.26	4.47	3.64
35/24	15.95	3.97	4.02	15.58	4.18	3.73	15.37	4.28	3.59	16.12	4.63	3.48
40/28	15.47	4.02	3.85	15.13	4.24	3.57	14.72	4.34	3.40	15.05	4.80	3.14
45/30	14.06	4.22	3.33	13.60	4.44	3.06	13.17	4.57	2.88	13.45	5.03	2.67
50/33	12.38	4.56	2.72	11.94	4.80	2.48	11.75	4.92	2.39	12.04	5.44	2.21
OAT	LWT											
	10.00			7.00			5.00			-		
	CC	PI	COP	CC	PI	COP	CC	PI	COP	CC	PI	COP
-5/-0	-	-	-	-	-	-	-	-	-	-	-	-
0/-	-	-	-	-	-	-	-	-	-	-	-	-
5/-	-	-	-	-	-	-	-	-	-	-	-	-
10/0	-	-	-	-	-	-	-	-	-	-	-	-
15/5	15.88	4.49	3.54	15.72	4.86	3.24	15.27	4.97	3.08	-	-	-
20/10	15.66	4.65	3.37	15.56	4.98	3.13	14.90	5.09	2.93	-	-	-
25/15	15.49	4.88	3.17	15.36	5.23	2.93	14.59	5.28	2.76	-	-	-
30/20	15.31	5.05	3.03	15.07	5.39	2.80	14.28	5.51	2.59	-	-	-
35/24	15.08	5.33	2.83	14.84	5.92	2.51	13.99	6.04	2.32	-	-	-
40/28	13.65	5.43	2.51	13.26	6.03	2.20	12.79	6.13	2.09	-	-	-
45/30	12.26	5.67	2.16	11.97	6.15	1.95	11.48	6.23	1.84	-	-	-
50/33	10.88	6.13	1.77	10.56	6.44	1.64	10.10	6.67	1.52	-	-	-

Note:
OAT: Outdoor ambient temperature
LWT: Leaving water temperature
CC: Cooling capacity
PI: Power input

2) **Pard load**

Model: 4kW

Heating

Part load heat capacity table with at LWT=35℃ (Peak)

OAT	Load											
	100%			90%			80%			70%		
	HC	PI	COP	HC	PI	COP	HC	PI	COP	HC	PI	COP
-25/-	2.65	1.84	1.44	2.39	1.66	1.44	2.16	1.48	1.46	1.90	1.29	1.47
-20/-	3.25	1.76	1.85	2.93	1.59	1.84	2.65	1.41	1.88	2.32	1.24	1.88
-15/-	3.67	1.69	2.17	3.31	1.52	2.18	2.99	1.36	2.20	2.63	1.19	2.21
-10/-	4.11	1.64	2.50	3.72	1.49	2.50	3.33	1.32	2.52	2.89	1.16	2.50
-7/-8	4.28	1.60	2.68	3.86	1.44	2.68	3.46	1.28	2.69	3.03	1.12	2.70
2/1	4.35	1.33	3.28	3.93	1.19	3.30	3.50	1.06	3.32	3.09	0.93	3.32
7/6	4.37	0.97	4.52	3.94	0.87	4.54	3.50	0.77	4.56	3.09	0.68	4.55
15/12	4.43	0.93	4.75	3.96	0.82	4.81	3.54	0.74	4.79	3.11	0.65	4.77
20/15	4.51	0.89	5.10	4.05	0.79	5.16	3.60	0.70	5.16	3.16	0.61	5.16
25/18	4.69	0.82	5.74	4.19	0.72	5.83	3.71	0.63	5.87	3.27	0.55	5.89
35/24	4.83	0.76	6.36	4.32	0.67	6.46	3.81	0.59	6.48	3.36	0.51	6.52
OAT	Load											
	60%			50%			40%			30%		
	HC	PI	COP	HC	PI	COP	HC	PI	COP	HC	PI	COP
-25/-	1.64	1.11	1.48	1.39	0.94	1.48	1.11	0.78	1.42	0.83	0.60	1.40
-20/-	2.00	1.06	1.89	1.69	0.91	1.87	1.38	0.74	1.86	1.04	0.57	1.83
-15/-	2.26	1.02	2.22	1.92	0.86	2.22	1.55	0.71	2.18	1.18	0.55	2.15
-10/-	2.50	0.99	2.53	2.14	0.85	2.53	1.71	0.69	2.49	1.32	0.54	2.44
-7/-8	2.60	0.96	2.71	2.22	0.82	2.72	1.78	0.68	2.62	1.39	0.53	2.61
2/1	2.65	0.80	3.33	2.22	0.67	3.31	1.80	0.56	3.22	1.41	0.44	3.23
7/6	2.65	0.58	4.56	2.22	0.49	4.54	1.78	0.36	4.96	1.42	0.27	5.24
15/12	2.66	0.55	4.79	2.24	0.47	4.76	1.78	0.38	4.67	1.39	0.30	4.65
20/15	2.70	0.52	5.18	2.28	0.44	5.15	1.83	0.36	5.10	1.40	0.28	4.92
25/18	2.79	0.47	5.89	2.39	0.41	5.87	1.90	0.33	5.78	1.49	0.26	5.63
35/24	2.85	0.44	6.53	2.51	0.38	6.68	1.95	0.30	6.42	1.50	0.24	6.14
OAT	Load											
	20%			10%			-			-		
	HC	PI	COP	HC	PI	COP	-			-		
-25/-	0.59	0.43	1.38	0.41	0.31	1.33	-	-	-	-	-	-
-20/-	0.72	0.41	1.76	0.50	0.30	1.68	-	-	-	-	-	-
-15/-	0.82	0.39	2.09	0.55	0.28	1.96	-	-	-	-	-	-
-10/-	0.92	0.38	2.38	0.63	0.27	2.29	-	-	-	-	-	-
-7/-8	0.96	0.37	2.60	0.66	0.27	2.44	-	-	-	-	-	-
2/1	0.98	0.31	3.22	0.65	0.22	2.98	-	-	-	-	-	-
7/6	0.98	0.23	4.32	0.68	0.16	4.27	-	-	-	-	-	-
15/12	1.01	0.22	4.67	0.67	0.15	4.35	-	-	-	-	-	-
20/15	0.98	0.20	4.83	0.69	0.14	4.75	-	-	-	-	-	-
25/18	1.01	0.19	5.39	0.70	0.13	5.41	-	-	-	-	-	-
35/24	1.04	0.17	6.02	0.71	0.12	5.92	-	-	-	-	-	-

OAT: Outdoor ambient temperature
HC: Heating capacity
PI: Power input

Part load heat capacity table with at LWT=45℃ (Peak)

OAT	Load											
	100%			90%			80%			70%		
	HC	PI	COP	HC	PI	COP	HC	PI	COP	HC	PI	COP
-25/-	2.59	2.13	1.22	2.33	1.92	1.22	2.11	1.71	1.24	1.85	1.49	1.25
-20/-	3.16	2.07	1.53	2.85	1.87	1.52	2.58	1.66	1.56	2.26	1.45	1.55
-15/-	3.53	2.01	1.75	3.19	1.81	1.76	2.87	1.62	1.78	2.53	1.41	1.78
-10/-	3.87	1.96	1.98	3.50	1.77	1.98	3.13	1.57	1.99	2.71	1.37	1.98
-7/-8	4.06	1.87	2.17	3.66	1.69	2.17	3.28	1.51	2.18	2.88	1.32	2.18
2/1	4.26	1.54	2.76	3.85	1.38	2.78	3.43	1.23	2.80	3.02	1.08	2.80
7/6	4.33	1.32	3.28	3.90	1.18	3.30	3.46	1.05	3.31	3.06	0.93	3.30
15/12	4.36	1.25	3.48	3.91	1.11	3.52	3.49	0.99	3.51	3.06	0.88	3.50
20/15	4.43	1.13	3.93	3.97	1.00	3.97	3.53	0.89	3.97	3.10	0.78	3.98
25/18	4.50	1.04	4.35	4.02	0.91	4.42	3.57	0.80	4.45	3.14	0.70	4.47
35/24	4.60	0.95	4.82	4.11	0.84	4.90	3.63	0.74	4.91	3.20	0.65	4.94
OAT	Load											
	60%			50%			40%			30%		
	HC	PI	COP	HC	PI	COP	HC	PI	COP	HC	PI	COP
-25/-	1.61	1.28	1.25	1.36	1.09	1.25	1.09	0.90	1.20	0.82	0.69	1.18
-20/-	1.95	1.24	1.57	1.65	1.07	1.55	1.34	0.88	1.54	1.01	0.67	1.51
-15/-	2.17	1.21	1.80	1.84	1.03	1.80	1.49	0.85	1.76	1.13	0.65	1.74
-10/-	2.35	1.18	2.00	2.01	1.01	2.00	1.60	0.82	1.97	1.24	0.65	1.93
-7/-8	2.47	1.12	2.20	2.11	0.96	2.20	1.69	0.80	2.12	1.32	0.62	2.11
2/1	2.59	0.92	2.81	2.17	0.78	2.79	1.76	0.65	2.72	1.38	0.51	2.72
7/6	2.62	0.79	3.31	2.20	0.67	3.29	1.76	0.49	3.60	1.41	0.37	3.80
15/12	2.62	0.75	3.51	2.21	0.63	3.49	1.76	0.51	3.42	1.37	0.40	3.41
20/15	2.65	0.66	3.99	2.24	0.56	3.97	1.79	0.46	3.93	1.37	0.36	3.79
25/18	2.68	0.60	4.46	2.30	0.52	4.45	1.82	0.42	4.38	1.43	0.33	4.27
35/24	2.71	0.55	4.95	2.39	0.47	5.06	1.86	0.38	4.87	1.43	0.31	4.66
OAT	Load											
	20%			10%			-			-		
	HC	PI	COP	HC	PI	COP	-			-		
-25/-	0.57	0.49	1.17	0.40	0.36	1.12	-	-	-	-	-	-
-20/-	0.70	0.48	1.46	0.49	0.35	1.39	-	-	-	-	-	-
-15/-	0.79	0.47	1.69	0.53	0.34	1.59	-	-	-	-	-	-
-10/-	0.86	0.46	1.88	0.59	0.33	1.81	-	-	-	-	-	-
-7/-8	0.91	0.43	2.10	0.63	0.32	1.97	-	-	-	-	-	-
2/1	0.96	0.35	2.72	0.64	0.25	2.51	-	-	-	-	-	-
7/6	0.97	0.31	3.14	0.67	0.22	3.10	-	-	-	-	-	-
15/12	0.99	0.29	3.42	0.66	0.21	3.19	-	-	-	-	-	-
20/15	0.97	0.26	3.72	0.67	0.18	3.66	-	-	-	-	-	-
25/18	0.97	0.24	4.09	0.67	0.16	4.10	-	-	-	-	-	-
35/24	0.99	0.22	4.57	0.68	0.15	4.49	-	-	-	-	-	-

OAT: Outdoor ambient temperature
HC: Heating capacity
PI: Power input

Part load heat capacity table with at LWT=55℃ (Peak)

OAT	Load											
	100%			90%			80%			70%		
	HC	PI	COP	HC	PI	COP	HC	PI	COP	HC	PI	COP
-25/-	-	-	-	-	-	-	-	-	-	-	-	-
-20/-	2.70	2.63	1.03	2.43	2.38	1.02	2.20	2.11	1.04	1.93	1.85	1.04
-15/-	3.21	2.54	1.26	2.89	2.29	1.26	2.61	2.04	1.28	2.29	1.79	1.28
-10/-	3.63	2.41	1.51	3.28	2.18	1.51	2.94	1.93	1.52	2.55	1.69	1.51
-7/-8	3.78	2.25	1.68	3.41	2.03	1.68	3.05	1.81	1.69	2.68	1.58	1.69
2/1	4.13	2.00	2.07	3.73	1.80	2.08	3.32	1.59	2.09	2.93	1.40	2.09
7/6	4.30	1.75	2.45	3.87	1.57	2.47	3.44	1.39	2.48	3.03	1.23	2.47
15/12	4.32	1.57	2.75	3.87	1.39	2.78	3.45	1.25	2.77	3.03	1.10	2.76
20/15	4.35	1.32	3.29	3.90	1.17	3.33	3.47	1.04	3.33	3.04	0.91	3.33
25/18	4.40	1.20	3.67	3.93	1.05	3.73	3.48	0.93	3.75	3.06	0.81	3.77
35/24	4.43	1.11	4.00	3.96	0.97	4.07	3.50	0.86	4.08	3.08	0.75	4.10
OAT	Load											
	60%			50%			40%			30%		
	HC	PI	COP	HC	PI	COP	HC	PI	COP	HC	PI	COP
-25/-	-	-	-	-	-	-	-	-	-	-	-	-
-20/-	1.66	1.58	1.05	1.41	1.36	1.04	1.15	1.11	1.03	0.86	0.85	1.02
-15/-	1.97	1.53	1.29	1.67	1.30	1.29	1.35	1.07	1.26	1.03	0.82	1.25
-10/-	2.21	1.45	1.52	1.89	1.24	1.52	1.51	1.00	1.50	1.17	0.79	1.47
-7/-8	2.30	1.35	1.70	1.97	1.15	1.71	1.57	0.96	1.64	1.23	0.75	1.64
2/1	2.52	1.20	2.10	2.11	1.01	2.09	1.71	0.84	2.03	1.34	0.66	2.03
7/6	2.60	1.05	2.48	2.18	0.88	2.46	1.75	0.74	2.37	1.40	0.60	2.35
15/12	2.59	0.94	2.77	2.19	0.79	2.75	1.74	0.65	2.70	1.36	0.51	2.69
20/15	2.61	0.78	3.34	2.20	0.66	3.32	1.76	0.54	3.29	1.35	0.42	3.18
25/18	2.62	0.69	3.77	2.24	0.60	3.75	1.78	0.48	3.70	1.39	0.39	3.60
35/24	2.61	0.64	4.11	2.30	0.55	4.21	1.79	0.44	4.04	1.38	0.36	3.87
OAT	Load											
	20%			10%			-			-		
	HC	PI	COP	HC	PI	COP	-			-		
-25/-	-	-	-	-	-	-	-	-	-	-	-	-
-20/-	0.60	0.61	0.98	0.42	0.45	0.93	-	-	-	-	-	-
-15/-	0.72	0.59	1.21	0.48	0.42	1.14	-	-	-	-	-	-
-10/-	0.81	0.56	1.44	0.56	0.40	1.38	-	-	-	-	-	-
-7/-8	0.85	0.52	1.63	0.58	0.38	1.53	-	-	-	-	-	-
2/1	0.93	0.46	2.03	0.62	0.33	1.88	-	-	-	-	-	-
7/6	0.97	0.41	2.35	0.67	0.29	2.32	-	-	-	-	-	-
15/12	0.98	0.36	2.70	0.65	0.26	2.51	-	-	-	-	-	-
20/15	0.95	0.30	3.12	0.66	0.22	3.07	-	-	-	-	-	-
25/18	0.95	0.27	3.45	0.65	0.19	3.46	-	-	-	-	-	-
35/24	0.95	0.25	3.79	0.66	0.18	3.73	-	-	-	-	-	-

OAT: Outdoor ambient temperature
HC: Heating capacity
PI: Power input

Cooing

Part load heat capacity table with at LWT=18℃

OAT	Load											
	100%			90%			80%			70%		
	HC	PI	COP	HC	PI	COP	HC	PI	COP	HC	PI	COP
-5/-0	5.17	0.54	9.55	4.65	0.49	9.53	4.21	0.43	9.69	3.70	0.38	9.76
0/-	5.02	0.59	8.50	4.51	0.53	8.47	4.09	0.47	8.64	3.58	0.41	8.63
5/-	4.87	0.73	6.71	4.40	0.65	6.73	3.97	0.58	6.79	3.49	0.51	6.83
10/0	4.85	0.88	5.54	4.39	0.79	5.53	3.92	0.70	5.58	3.41	0.62	5.53
15/5	4.82	0.99	4.89	4.35	0.89	4.90	3.89	0.79	4.92	3.42	0.69	4.93
20/10	4.64	1.01	4.59	4.19	0.91	4.62	3.73	0.80	4.65	3.29	0.71	4.66
25/15	4.60	1.06	4.33	4.14	0.95	4.36	3.68	0.84	4.37	3.25	0.74	4.36
30/20	4.44	1.10	4.04	3.98	0.97	4.08	3.55	0.87	4.07	3.12	0.77	4.06
35/24	4.23	1.15	3.68	3.80	1.02	3.72	3.37	0.91	3.72	2.96	0.79	3.72
40/28	4.04	1.17	3.47	3.61	1.03	3.52	3.20	0.90	3.54	2.82	0.79	3.56
45/30	3.74	1.22	3.05	3.34	1.08	3.10	2.95	0.95	3.11	2.60	0.83	3.13
50/33	3.23	1.32	2.44	2.89	1.16	2.48	2.55	1.03	2.49	2.25	0.90	2.50
OAT	Load											
	60%			50%			40%			30%		
	HC	PI	COP	HC	PI	COP	HC	PI	COP	HC	PI	COP
-5/-0	3.20	0.33	9.83	2.71	0.28	9.83	2.17	0.23	9.43	1.63	0.18	9.25
0/-	3.09	0.35	8.71	2.61	0.30	8.59	2.13	0.25	8.54	1.61	0.19	8.42
5/-	3.00	0.44	6.87	2.54	0.37	6.87	2.05	0.31	6.73	1.56	0.24	6.65
10/0	2.95	0.53	5.59	2.52	0.45	5.59	2.01	0.37	5.51	1.56	0.29	5.40
15/5	2.93	0.59	4.95	2.51	0.50	4.97	2.00	0.42	4.78	1.57	0.33	4.77
20/10	2.83	0.61	4.66	2.37	0.51	4.64	1.92	0.43	4.52	1.51	0.33	4.52
25/15	2.79	0.64	4.38	2.33	0.54	4.35	1.87	0.45	4.19	1.50	0.36	4.14
30/20	2.66	0.65	4.07	2.25	0.56	4.05	1.79	0.45	3.97	1.40	0.35	3.95
35/24	2.53	0.68	3.73	2.14	0.58	3.71	1.71	0.47	3.68	1.31	0.37	3.55
40/28	2.41	0.68	3.55	2.06	0.58	3.54	1.64	0.47	3.49	1.28	0.38	3.40
45/30	2.21	0.70	3.13	1.94	0.61	3.21	1.51	0.49	3.09	1.16	0.39	2.95
50/33	1.91	0.76	2.51	1.68	0.66	2.57	1.31	0.53	2.47	1.01	0.43	2.36
OAT	Load											
	20%			10%			-			-		
	HC	PI	COP	HC	PI	COP	-			-		
-5/-0	1.15	0.13	9.17	0.80	0.09	8.81	-	-	-	-	-	-
0/-	1.11	0.14	8.09	0.77	0.10	7.74	-	-	-	-	-	-
5/-	1.09	0.17	6.45	0.74	0.12	6.07	-	-	-	-	-	-
10/0	1.08	0.21	5.28	0.74	0.15	5.07	-	-	-	-	-	-
15/5	1.08	0.23	4.74	0.74	0.17	4.45	-	-	-	-	-	-
20/10	1.05	0.23	4.51	0.70	0.17	4.17	-	-	-	-	-	-
25/15	1.04	0.25	4.15	0.71	0.17	4.10	-	-	-	-	-	-
30/20	1.01	0.25	3.97	0.67	0.18	3.70	-	-	-	-	-	-
35/24	0.92	0.26	3.48	0.64	0.19	3.43	-	-	-	-	-	-
40/28	0.87	0.27	3.25	0.60	0.18	3.27	-	-	-	-	-	-
45/30	0.80	0.28	2.89	0.55	0.19	2.84	-	-	-	-	-	-
50/33	0.70	0.30	2.31	0.48	0.21	2.27						

OAT: Outdoor ambient temperature
CC: Cooling capacity
PI: Power input

Part load heat capacity table with at LWT=7℃

OAT	Load											
	100%			90%			80%			70%		
	HC	PI	COP	HC	PI	COP	HC	PI	COP	HC	PI	COP
-5/-0	-	-	-	-	-	-	-	-	-	-	-	-
0/-	-	-	-	-	-	-	-	-	-	-	-	-
5/-	-	-	-	-	-	-	-	-	-	-	-	-
10/0	-	-	-	-	-	-	-	-	-	-	-	-
15/5	4.48	1.31	3.42	4.05	1.19	3.41	3.62	1.05	3.44	3.15	0.92	3.41
20/10	4.31	1.34	3.21	3.89	1.21	3.22	3.49	1.08	3.23	3.06	0.94	3.24
25/15	4.28	1.41	3.03	3.87	1.27	3.05	3.45	1.12	3.07	3.04	0.99	3.07
30/20	4.20	1.46	2.87	3.78	1.31	2.89	3.36	1.16	2.90	2.97	1.03	2.89
35/24	4.18	1.54	2.72	3.74	1.36	2.75	3.34	1.22	2.74	2.93	1.07	2.73
40/28	3.76	1.55	2.42	3.37	1.38	2.45	3.00	1.22	2.45	2.63	1.07	2.45
45/30	3.48	1.63	2.14	3.10	1.43	2.17	2.75	1.26	2.18	2.42	1.11	2.19
50/33	3.01	1.76	1.71	2.69	1.55	1.74	2.38	1.36	1.74	2.09	1.19	1.75
OAT	Load											
	60%			50%			40%			30%		
	HC	PI	COP	HC	PI	COP	HC	PI	COP	HC	PI	COP
-5/-0	-	-	-	-	-	-	-	-	-	-	-	-
0/-	-	-	-	-	-	-	-	-	-	-	-	-
5/-	-	-	-	-	-	-	-	-	-	-	-	-
10/0	-	-	-	-	-	-	-	-	-	-	-	-
15/5	2.72	0.79	3.45	2.33	0.68	3.45	1.86	0.55	3.40	1.44	0.43	3.33
20/10	2.62	0.81	3.25	2.24	0.69	3.27	1.79	0.57	3.14	1.40	0.45	3.13
25/15	2.61	0.85	3.08	2.18	0.71	3.06	1.77	0.59	2.98	1.39	0.47	2.98
30/20	2.55	0.88	2.90	2.13	0.74	2.88	1.71	0.61	2.78	1.37	0.50	2.74
35/24	2.51	0.91	2.74	2.11	0.78	2.73	1.68	0.63	2.67	1.32	0.49	2.66
40/28	2.25	0.92	2.46	1.90	0.78	2.45	1.52	0.63	2.42	1.17	0.50	2.34
45/30	2.07	0.94	2.19	1.77	0.81	2.18	1.41	0.65	2.15	1.10	0.53	2.10
50/33	1.77	1.01	1.75	1.56	0.87	1.80	1.22	0.70	1.73	0.94	0.57	1.65
OAT	Load											
	20%			10%			-			-		
	HC	PI	COP	HC	PI	COP	-			-		
-5/-0	-	-	-	-	-	-	-	-	-	-	-	-
0/-	-	-	-	-	-	-	-	-	-	-	-	-
5/-	-	-	-	-	-	-	-	-	-	-	-	-
10/0	-	-	-	-	-	-	-	-	-	-	-	-
15/5	1.00	0.31	3.26	0.69	0.22	3.13	-	-	-	-	-	-
20/10	0.97	0.31	3.11	0.66	0.23	2.93	-	-	-	-	-	-
25/15	0.97	0.32	2.98	0.64	0.23	2.75	-	-	-	-	-	-
30/20	0.95	0.34	2.75	0.65	0.24	2.71	-	-	-	-	-	-
35/24	0.95	0.35	2.67	0.63	0.25	2.49	-	-	-	-	-	-
40/28	0.82	0.36	2.30	0.57	0.25	2.26	-	-	-	-	-	-
45/30	0.75	0.37	2.01	0.52	0.26	2.01	-	-	-	-	-	-
50/33	0.65	0.40	1.62	0.45	0.28	1.59	-	-	-	-	-	-

OAT: Outdoor ambient temperature
CC: Cooling capacity
PI: Power input

Model: 6kW
Heating
Part load heat capacity table with at LWT=35℃ (Peak)

OAT	Load											
	100%			90%			80%			70%		
	HC	PI	COP	HC	PI	COP	HC	PI	COP	HC	PI	COP
-25/-	4.30	2.86	1.50	3.87	2.58	1.50	3.50	2.30	1.52	3.08	2.00	1.54
-20/-	4.83	2.74	1.76	4.35	2.47	1.76	3.94	2.20	1.80	3.45	1.92	1.79
-15/-	5.46	2.63	2.07	4.92	2.37	2.08	4.44	2.11	2.10	3.90	1.85	2.11
-10/-	6.00	2.56	2.35	5.43	2.32	2.34	4.86	2.05	2.36	4.21	1.80	2.34
-7/-8	6.23	2.45	2.54	5.62	2.21	2.55	5.03	1.97	2.56	4.42	1.72	2.56
2/1	6.35	2.01	3.16	5.73	1.80	3.17	5.11	1.60	3.20	4.51	1.41	3.20
7/6	6.47	1.51	4.28	5.83	1.35	4.31	5.18	1.20	4.32	4.57	1.06	4.31
15/12	6.58	1.45	4.54	5.89	1.28	4.59	5.26	1.15	4.58	4.62	1.01	4.56
20/15	6.71	1.38	4.87	6.02	1.22	4.92	5.35	1.09	4.93	4.69	0.95	4.93
25/18	6.97	1.27	5.48	6.22	1.12	5.57	5.52	0.98	5.60	4.86	0.86	5.63
35/24	7.17	1.18	6.08	6.41	1.04	6.17	5.67	0.92	6.19	4.99	0.80	6.23
OAT	Load											
	60%			50%			40%			30%		
	HC	PI	COP	HC	PI	COP	HC	PI	COP	HC	PI	COP
-25/-	2.67	1.72	1.55	2.26	1.46	1.55	1.81	1.22	1.48	1.35	0.93	1.46
-20/-	2.97	1.64	1.81	2.52	1.41	1.79	2.05	1.16	1.77	1.55	0.88	1.75
-15/-	3.36	1.58	2.12	2.85	1.34	2.12	2.30	1.10	2.08	1.75	0.85	2.06
-10/-	3.65	1.54	2.37	3.12	1.32	2.37	2.49	1.07	2.33	1.93	0.84	2.29
-7/-8	3.79	1.47	2.58	3.24	1.25	2.59	2.59	1.04	2.49	2.02	0.82	2.48
2/1	3.86	1.21	3.20	3.24	1.01	3.19	2.63	0.85	3.10	2.06	0.66	3.11
7/6	3.92	0.91	4.33	3.28	0.76	4.30	2.63	0.56	4.70	2.10	0.42	4.97
15/12	3.95	0.86	4.58	3.33	0.73	4.55	2.65	0.59	4.46	2.07	0.47	4.44
20/15	4.02	0.81	4.94	3.39	0.69	4.92	2.72	0.56	4.87	2.08	0.44	4.70
25/18	4.14	0.74	5.63	3.55	0.63	5.60	2.82	0.51	5.52	2.21	0.41	5.38
35/24	4.23	0.68	6.23	3.73	0.58	6.38	2.90	0.47	6.14	2.23	0.38	5.87
OAT	Load											
	20%			10%			-			-		
	HC	PI	COP	HC	PI	COP	-			-		
-25/-	0.95	0.66	1.44	0.67	0.48	1.39	-	-	-	-	-	-
-20/-	1.07	0.64	1.68	0.74	0.46	1.61	-	-	-	-	-	-
-15/-	1.22	0.61	1.99	0.82	0.44	1.88	-	-	-	-	-	-
-10/-	1.34	0.60	2.24	0.92	0.43	2.15	-	-	-	-	-	-
-7/-8	1.39	0.57	2.47	0.96	0.41	2.32	-	-	-	-	-	-
2/1	1.43	0.46	3.10	0.95	0.33	2.87	-	-	-	-	-	-
7/6	1.46	0.36	4.10	1.00	0.25	4.05	-	-	-	-	-	-
15/12	1.49	0.33	4.46	0.99	0.24	4.16	-	-	-	-	-	-
20/15	1.46	0.32	4.62	1.02	0.22	4.54	-	-	-	-	-	-
25/18	1.50	0.29	5.15	1.04	0.20	5.17	-	-	-	-	-	-
35/24	1.54	0.27	5.75	1.06	0.19	5.66	-	-	-	-	-	-

OAT: Outdoor ambient temperature
HC: Heating capacity
PI: Power input

Part load heat capacity table with at LWT=45℃ (Peak)

OAT	Load											
	100%			90%			80%			70%		
	HC	PI	COP	HC	PI	COP	HC	PI	COP	HC	PI	COP
-25/-	3.89	3.31	1.18	3.50	2.99	1.17	3.17	2.66	1.19	2.79	2.32	1.20
-20/-	4.70	3.22	1.46	4.23	2.91	1.46	3.84	2.58	1.49	3.36	2.26	1.48
-15/-	5.25	3.13	1.68	4.73	2.82	1.68	4.27	2.52	1.70	3.75	2.20	1.70
-10/-	5.75	3.04	1.89	5.19	2.75	1.89	4.65	2.44	1.90	4.03	2.14	1.89
-7/-8	6.03	2.92	2.07	5.45	2.63	2.07	4.88	2.34	2.08	4.28	2.05	2.09
2/1	6.17	2.40	2.58	5.58	2.15	2.59	4.97	1.91	2.61	4.38	1.68	2.61
7/6	6.29	1.97	3.20	5.66	1.76	3.22	5.03	1.56	3.23	4.44	1.38	3.22
15/12	6.48	1.88	3.46	5.80	1.66	3.50	5.18	1.49	3.48	4.55	1.31	3.47
20/15	6.58	1.75	3.75	5.90	1.56	3.80	5.24	1.38	3.80	4.60	1.21	3.80
25/18	6.69	1.61	4.16	5.98	1.42	4.22	5.30	1.25	4.25	4.66	1.09	4.27
35/24	6.84	1.49	4.60	6.11	1.31	4.68	5.40	1.15	4.69	4.75	1.01	4.72
OAT	Load											
	60%			50%			40%			30%		
	HC	PI	COP	HC	PI	COP	HC	PI	COP	HC	PI	COP
-25/-	2.41	1.99	1.21	2.04	1.69	1.21	1.63	1.41	1.16	1.23	1.08	1.14
-20/-	2.89	1.93	1.50	2.45	1.66	1.48	2.00	1.36	1.47	1.50	1.04	1.45
-15/-	3.23	1.88	1.72	2.74	1.60	1.72	2.21	1.32	1.68	1.68	1.01	1.66
-10/-	3.49	1.83	1.91	2.99	1.57	1.91	2.38	1.27	1.88	1.85	1.00	1.84
-7/-8	3.67	1.75	2.10	3.14	1.49	2.11	2.51	1.24	2.03	1.96	0.97	2.02
2/1	3.76	1.44	2.61	3.15	1.21	2.60	2.56	1.01	2.53	2.01	0.79	2.54
7/6	3.81	1.18	3.23	3.19	0.99	3.21	2.55	0.73	3.51	2.04	0.55	3.72
15/12	3.89	1.12	3.49	3.28	0.95	3.46	2.61	0.77	3.40	2.04	0.60	3.38
20/15	3.94	1.03	3.81	3.32	0.88	3.79	2.67	0.71	3.75	2.04	0.56	3.62
25/18	3.98	0.93	4.26	3.41	0.80	4.25	2.71	0.65	4.19	2.12	0.52	4.08
35/24	4.03	0.85	4.72	3.56	0.74	4.84	2.76	0.59	4.65	2.13	0.48	4.45
OAT	Load											
	20%			10%			-			-		
	HC	PI	COP	HC	PI	COP	-			-		
-25/-	0.86	0.76	1.13	0.60	0.56	1.08	-	-	-	-	-	-
-20/-	1.04	0.75	1.39	0.72	0.54	1.33	-	-	-	-	-	-
-15/-	1.17	0.73	1.61	0.79	0.52	1.52	-	-	-	-	-	-
-10/-	1.28	0.71	1.80	0.88	0.51	1.73	-	-	-	-	-	-
-7/-8	1.35	0.67	2.01	0.93	0.49	1.89	-	-	-	-	-	-
2/1	1.40	0.55	2.53	0.93	0.40	2.34	-	-	-	-	-	-
7/6	1.42	0.46	3.07	0.98	0.32	3.03	-	-	-	-	-	-
15/12	1.47	0.43	3.40	0.98	0.31	3.16	-	-	-	-	-	-
20/15	1.43	0.40	3.56	1.00	0.29	3.50	-	-	-	-	-	-
25/18	1.44	0.37	3.90	1.00	0.25	3.92	-	-	-	-	-	-
35/24	1.47	0.34	4.36	1.01	0.24	4.29	-	-	-	-	-	-

OAT: Outdoor ambient temperature
HC: Heating capacity
PI: Power input

Part load heat capacity table with at LWT=55℃ (Peak)

OAT	Load											
	100%			90%			80%			70%		
	HC	PI	COP	HC	PI	COP	HC	PI	COP	HC	PI	COP
-25/-	-	-	-	-	-	-	-	-	-	-	-	-
-20/-	4.16	3.98	1.05	3.74	3.59	1.04	3.39	3.19	1.06	2.97	2.79	1.06
-15/-	4.77	3.85	1.24	4.30	3.47	1.24	3.88	3.10	1.25	3.41	2.71	1.26
-10/-	5.28	3.66	1.44	4.77	3.31	1.44	4.27	2.94	1.45	3.70	2.57	1.44
-7/-8	5.39	3.27	1.65	4.87	2.95	1.65	4.36	2.63	1.66	3.82	2.30	1.66
2/1	5.89	3.17	1.86	5.31	2.84	1.87	4.74	2.52	1.88	4.18	2.22	1.89
7/6	6.05	2.43	2.49	5.44	2.18	2.50	4.84	1.93	2.51	4.27	1.70	2.51
15/12	6.35	2.36	2.69	5.68	2.09	2.72	5.07	1.87	2.71	4.45	1.65	2.70
20/15	6.47	2.08	3.12	5.80	1.84	3.15	5.16	1.64	3.15	4.52	1.43	3.16
25/18	6.53	1.88	3.48	5.83	1.65	3.53	5.17	1.46	3.55	4.55	1.28	3.57
35/24	6.58	1.74	3.79	5.88	1.53	3.85	5.20	1.35	3.87	4.57	1.18	3.89
OAT	Load											
	60%			50%			40%			30%		
	HC	PI	COP	HC	PI	COP	HC	PI	COP	HC	PI	COP
-25/-	-	-	-	-	-	-	-	-	-	-	-	-
-20/-	2.56	2.39	1.07	2.17	2.05	1.06	1.77	1.68	1.05	1.33	1.28	1.04
-15/-	2.93	2.32	1.27	2.49	1.97	1.27	2.01	1.62	1.24	1.53	1.25	1.23
-10/-	3.21	2.20	1.46	2.74	1.89	1.45	2.19	1.53	1.43	1.70	1.21	1.41
-7/-8	3.28	1.96	1.67	2.80	1.67	1.68	2.24	1.39	1.61	1.75	1.09	1.61
2/1	3.58	1.90	1.89	3.00	1.60	1.88	2.44	1.33	1.83	1.91	1.04	1.83
7/6	3.66	1.46	2.51	3.07	1.23	2.50	2.45	1.02	2.40	1.96	0.83	2.38
15/12	3.81	1.41	2.71	3.21	1.19	2.69	2.56	0.97	2.64	2.00	0.76	2.63
20/15	3.87	1.22	3.16	3.27	1.04	3.15	2.62	0.84	3.12	2.01	0.67	3.01
25/18	3.89	1.09	3.57	3.33	0.94	3.55	2.65	0.76	3.50	2.07	0.61	3.41
35/24	3.88	1.00	3.89	3.42	0.86	3.98	2.66	0.69	3.83	2.05	0.56	3.66
OAT	Load											
	20%			10%			-			-		
	HC	PI	COP	HC	PI	COP	-			-		
-25/-	-	-	-	-	-	-	-	-	-	-	-	-
-20/-	0.92	0.93	1.00	0.64	0.67	0.95	-	-	-	-	-	-
-15/-	1.06	0.89	1.19	0.72	0.64	1.12	-	-	-	-	-	-
-10/-	1.18	0.86	1.37	0.81	0.61	1.32	-	-	-	-	-	-
-7/-8	1.21	0.76	1.60	0.83	0.55	1.50	-	-	-	-	-	-
2/1	1.33	0.73	1.83	0.88	0.52	1.69	-	-	-	-	-	-
7/6	1.36	0.57	2.38	0.94	0.40	2.35	-	-	-	-	-	-
15/12	1.44	0.55	2.64	0.96	0.39	2.46	-	-	-	-	-	-
20/15	1.41	0.48	2.95	0.98	0.34	2.91	-	-	-	-	-	-
25/18	1.40	0.43	3.26	0.97	0.30	3.28	-	-	-	-	-	-
35/24	1.41	0.39	3.59	0.97	0.28	3.53	-	-	-	-	-	-

OAT: Outdoor ambient temperature
HC: Heating capacity
PI: Power input

Cooing

Part load heat capacity table with at LWT=18℃

OAT	Load											
	100%			90%			80%			70%		
	HC	PI	COP	HC	PI	COP	HC	PI	COP	HC	PI	COP
-5/-0	7.05	0.71	9.88	6.35	0.64	9.87	5.75	0.57	10.03	5.05	0.50	10.11
0/-	6.85	0.79	8.64	6.16	0.72	8.62	5.59	0.64	8.80	4.89	0.56	8.79
5/-	6.65	0.96	6.95	6.00	0.86	6.96	5.41	0.77	7.03	4.76	0.67	7.07
10/0	6.62	1.16	5.73	5.98	1.05	5.72	5.36	0.93	5.77	4.65	0.81	5.73
15/5	6.58	1.30	5.06	5.93	1.17	5.07	5.31	1.04	5.09	4.66	0.91	5.10
20/10	6.33	1.33	4.75	5.72	1.20	4.78	5.10	1.06	4.81	4.50	0.93	4.82
25/15	6.28	1.40	4.49	5.65	1.25	4.51	5.03	1.11	4.53	4.44	0.98	4.52
30/20	6.06	1.45	4.18	5.43	1.28	4.23	4.84	1.15	4.21	4.26	1.01	4.20
35/24	5.78	1.51	3.83	5.18	1.34	3.88	4.60	1.19	3.88	4.04	1.04	3.88
40/28	5.52	1.54	3.59	4.93	1.35	3.64	4.37	1.19	3.67	3.85	1.04	3.68
45/30	5.10	1.61	3.16	4.56	1.42	3.21	4.03	1.25	3.22	3.55	1.09	3.24
50/33	4.41	1.74	2.53	3.95	1.54	2.57	3.49	1.35	2.58	3.07	1.18	2.59
OAT	Load											
	60%			50%			40%			30%		
	HC	PI	COP	HC	PI	COP	HC	PI	COP	HC	PI	COP
-5/-0	4.37	0.43	10.18	3.70	0.36	10.17	2.96	0.30	9.77	2.22	0.23	9.58
0/-	4.21	0.48	8.86	3.57	0.41	8.75	2.91	0.34	8.69	2.19	0.26	8.56
5/-	4.09	0.58	7.11	3.47	0.49	7.11	2.80	0.40	6.96	2.14	0.31	6.88
10/0	4.02	0.70	5.79	3.44	0.59	5.79	2.75	0.48	5.70	2.13	0.38	5.59
15/5	4.00	0.78	5.13	3.42	0.66	5.15	2.74	0.55	4.95	2.14	0.43	4.94
20/10	3.86	0.80	4.82	3.23	0.67	4.80	2.62	0.56	4.67	2.06	0.44	4.68
25/15	3.81	0.84	4.53	3.19	0.71	4.50	2.55	0.59	4.34	2.04	0.48	4.29
30/20	3.64	0.86	4.21	3.07	0.73	4.19	2.44	0.59	4.11	1.91	0.47	4.09
35/24	3.46	0.89	3.89	2.92	0.75	3.87	2.34	0.61	3.83	1.79	0.48	3.70
40/28	3.28	0.89	3.68	2.81	0.77	3.67	2.23	0.62	3.61	1.75	0.50	3.52
45/30	3.01	0.93	3.24	2.65	0.80	3.32	2.06	0.65	3.19	1.59	0.52	3.05
50/33	2.60	1.00	2.60	2.30	0.86	2.66	1.78	0.70	2.55	1.37	0.56	2.44
OAT	Load											
	20%			10%			-			-		
	HC	PI	COP	HC	PI	COP	-			-		
-5/-0	1.57	0.16	9.50	1.09	0.12	9.12	-	-	-	-	-	-
0/-	1.52	0.18	8.24	1.05	0.13	7.88	-	-	-	-	-	-
5/-	1.48	0.22	6.68	1.00	0.16	6.28	-	-	-	-	-	-
10/0	1.48	0.27	5.46	1.01	0.19	5.25	-	-	-	-	-	-
15/5	1.47	0.30	4.91	1.01	0.22	4.61	-	-	-	-	-	-
20/10	1.43	0.31	4.67	0.95	0.22	4.32	-	-	-	-	-	-
25/15	1.41	0.33	4.30	0.97	0.23	4.24	-	-	-	-	-	-
30/20	1.38	0.33	4.11	0.92	0.24	3.83	-	-	-	-	-	-
35/24	1.26	0.35	3.63	0.88	0.25	3.57	-	-	-	-	-	-
40/28	1.19	0.35	3.37	0.82	0.24	3.38	-	-	-	-	-	-
45/30	1.10	0.37	2.99	0.76	0.26	2.94	-	-	-	-	-	-
50/33	0.95	0.40	2.40	0.65	0.28	2.35						

OAT: Outdoor ambient temperature
CC: Cooling capacity
PI: Power input

Part load heat capacity table with at LWT=7℃

OAT	Load											
	100%			90%			80%			70%		
	HC	PI	COP	HC	PI	COP	HC	PI	COP	HC	PI	COP
-5/-0	-	-	-	-	-	-	-	-	-	-	-	-
0/-	-	-	-	-	-	-	-	-	-	-	-	-
5/-	-	-	-	-	-	-	-	-	-	-	-	-
10/0	-	-	-	-	-	-	-	-	-	-	-	-
15/5	6.12	1.72	3.55	5.53	1.56	3.54	4.95	1.38	3.58	4.29	1.21	3.55
20/10	5.89	1.77	3.33	5.31	1.59	3.34	4.76	1.42	3.35	4.17	1.24	3.36
25/15	5.84	1.86	3.15	5.28	1.67	3.16	4.70	1.48	3.19	4.15	1.30	3.19
30/20	5.73	1.92	2.98	5.16	1.72	3.00	4.59	1.52	3.01	4.05	1.35	3.00
35/24	5.25	2.00	2.63	4.70	1.77	2.65	4.19	1.59	2.64	3.69	1.40	2.64
40/28	5.13	2.04	2.52	4.60	1.81	2.54	4.09	1.61	2.54	3.59	1.41	2.55
45/30	4.74	2.14	2.22	4.24	1.88	2.25	3.76	1.66	2.27	3.31	1.45	2.28
50/33	4.10	2.31	1.77	3.67	2.04	1.80	3.24	1.79	1.81	2.85	1.57	1.82
OAT	Load											
	60%			50%			40%			30%		
	HC	PI	COP	HC	PI	COP	HC	PI	COP	HC	PI	COP
-5/-0	-	-	-	-	-	-	-	-	-	-	-	-
0/-	-	-	-	-	-	-	-	-	-	-	-	-
5/-	-	-	-	-	-	-	-	-	-	-	-	-
10/0	-	-	-	-	-	-	-	-	-	-	-	-
15/5	3.72	1.04	3.58	3.18	0.89	3.58	2.54	0.72	3.53	1.97	0.57	3.46
20/10	3.58	1.06	3.38	3.06	0.90	3.39	2.45	0.75	3.26	1.91	0.59	3.25
25/15	3.56	1.11	3.19	2.98	0.94	3.18	2.42	0.78	3.09	1.90	0.61	3.10
30/20	3.47	1.15	3.01	2.91	0.97	2.99	2.33	0.81	2.88	1.86	0.65	2.85
35/24	3.15	1.19	2.65	2.66	1.01	2.63	2.12	0.82	2.58	1.65	0.64	2.57
40/28	3.07	1.20	2.55	2.59	1.02	2.54	2.08	0.83	2.52	1.59	0.65	2.43
45/30	2.82	1.24	2.28	2.42	1.07	2.27	1.92	0.86	2.23	1.50	0.69	2.18
50/33	2.42	1.33	1.82	2.13	1.15	1.86	1.66	0.93	1.79	1.28	0.74	1.71
OAT	Load											
	20%			10%			-			-		
	HC	PI	COP	HC	PI	COP	-			-		
-5/-0	-	-	-	-	-	-	-	-	-	-	-	-
0/-	-	-	-	-	-	-	-	-	-	-	-	-
5/-	-	-	-	-	-	-	-	-	-	-	-	-
10/0	-	-	-	-	-	-	-	-	-	-	-	-
15/5	1.36	0.40	3.38	0.94	0.29	3.25	-	-	-	-	-	-
20/10	1.32	0.41	3.23	0.91	0.30	3.04	-	-	-	-	-	-
25/15	1.32	0.43	3.09	0.88	0.31	2.86	-	-	-	-	-	-
30/20	1.29	0.45	2.85	0.89	0.32	2.82	-	-	-	-	-	-
35/24	1.19	0.46	2.58	0.79	0.33	2.40	-	-	-	-	-	-
40/28	1.12	0.47	2.38	0.78	0.33	2.35	-	-	-	-	-	-
45/30	1.02	0.49	2.08	0.71	0.34	2.09	-	-	-	-	-	-
50/33	0.88	0.53	1.68	0.61	0.37	1.65	-	-	-	-	-	-

OAT: Outdoor ambient temperature
CC: Cooling capacity
PI: Power input

Model: 8kW

Heating

Part load heat capacity table with at LWT=35℃ (Peak)

OAT	Load											
	100%			90%			80%			70%		
	HC	PI	COP	HC	PI	COP	HC	PI	COP	HC	PI	COP
-25/-	5.42	3.62	1.50	4.88	3.26	1.50	4.42	2.90	1.52	3.88	2.53	1.53
-20/-	6.50	3.46	1.88	5.85	3.12	1.87	5.31	2.77	1.91	4.64	2.43	1.91
-15/-	7.34	3.39	2.17	6.62	3.05	2.17	5.98	2.73	2.19	5.25	2.38	2.20
-10/-	8.23	3.34	2.46	7.44	3.03	2.46	6.66	2.69	2.48	5.78	2.35	2.46
-7/-8	8.49	3.14	2.70	7.66	2.83	2.71	6.86	2.52	2.72	6.02	2.21	2.73
2/1	8.61	2.59	3.32	7.77	2.33	3.34	6.93	2.06	3.36	6.11	1.82	3.37
7/6	8.76	1.89	4.64	7.88	1.69	4.67	7.01	1.50	4.68	6.18	1.32	4.67
15/12	8.86	1.83	4.84	7.93	1.62	4.89	7.08	1.45	4.87	6.22	1.28	4.86
20/15	9.03	1.74	5.19	8.10	1.54	5.25	7.20	1.37	5.25	6.31	1.20	5.26
25/18	9.22	1.60	5.75	8.24	1.41	5.84	7.30	1.24	5.87	6.43	1.09	5.90
35/24	9.49	1.49	6.36	8.49	1.31	6.47	7.50	1.16	6.49	6.60	1.01	6.52
OAT	Load											
	60%			50%			40%			30%		
	HC	PI	COP	HC	PI	COP	HC	PI	COP	HC	PI	COP
-25/-	3.36	2.18	1.54	2.85	1.84	1.54	2.28	1.54	1.48	1.71	1.18	1.45
-20/-	4.00	2.07	1.93	3.39	1.78	1.90	2.76	1.46	1.89	2.08	1.12	1.86
-15/-	4.52	2.04	2.22	3.83	1.73	2.22	3.09	1.42	2.17	2.36	1.10	2.15
-10/-	5.00	2.01	2.48	4.28	1.72	2.48	3.42	1.39	2.45	2.65	1.10	2.40
-7/-8	5.16	1.88	2.74	4.41	1.61	2.75	3.53	1.34	2.65	2.76	1.05	2.64
2/1	5.24	1.56	3.37	4.39	1.31	3.35	3.56	1.09	3.26	2.80	0.86	3.27
7/6	5.31	1.13	4.69	4.44	0.95	4.66	3.56	0.70	5.09	2.85	0.53	5.39
15/12	5.31	1.09	4.88	4.48	0.92	4.85	3.57	0.75	4.76	2.79	0.59	4.73
20/15	5.41	1.03	5.27	4.56	0.87	5.24	3.66	0.70	5.19	2.80	0.56	5.01
25/18	5.49	0.93	5.90	4.70	0.80	5.87	3.74	0.65	5.79	2.92	0.52	5.64
35/24	5.60	0.86	6.53	4.94	0.74	6.69	3.84	0.60	6.43	2.95	0.48	6.15
OAT	Load											
	20%			10%			-			-		
	HC	PI	COP	HC	PI	COP	-			-		
-25/-	1.20	0.84	1.44	0.84	0.61	1.38	-	-	-	-	-	-
-20/-	1.44	0.81	1.79	1.00	0.58	1.71	-	-	-	-	-	-
-15/-	1.64	0.79	2.08	1.11	0.57	1.96	-	-	-	-	-	-
-10/-	1.84	0.78	2.34	1.26	0.56	2.25	-	-	-	-	-	-
-7/-8	1.90	0.73	2.62	1.31	0.53	2.46	-	-	-	-	-	-
2/1	1.95	0.60	3.26	1.29	0.43	3.02	-	-	-	-	-	-
7/6	1.97	0.44	4.44	1.36	0.31	4.39	-	-	-	-	-	-
15/12	2.01	0.42	4.75	1.34	0.30	4.43	-	-	-	-	-	-
20/15	1.97	0.40	4.92	1.37	0.28	4.84	-	-	-	-	-	-
25/18	1.98	0.37	5.40	1.37	0.25	5.42	-	-	-	-	-	-
35/24	2.04	0.34	6.03	1.40	0.24	5.92	-	-	-	-	-	-

OAT: Outdoor ambient temperature
HC: Heating capacity
PI: Power input

Part load heat capacity table with at LWT=45℃ (Peak)

OAT	Load											
	100%			90%			80%			70%		
	HC	PI	COP	HC	PI	COP	HC	PI	COP	HC	PI	COP
-25/-	4.98	4.18	1.19	4.49	3.77	1.19	4.06	3.36	1.21	3.56	2.93	1.22
-20/-	6.33	4.07	1.56	5.70	3.67	1.55	5.16	3.26	1.58	4.52	2.86	1.58
-15/-	7.06	3.96	1.79	6.37	3.56	1.79	5.75	3.18	1.81	5.05	2.78	1.82
-10/-	7.73	3.84	2.01	6.99	3.48	2.01	6.26	3.09	2.03	5.43	2.70	2.01
-7/-8	8.12	3.68	2.20	7.33	3.32	2.21	6.56	2.96	2.22	5.76	2.59	2.22
2/1	8.33	3.03	2.75	7.52	2.72	2.76	6.70	2.41	2.78	5.91	2.12	2.79
7/6	8.47	2.50	3.38	7.62	2.24	3.40	6.77	1.98	3.41	5.98	1.75	3.41
15/12	8.61	2.46	3.49	7.70	2.18	3.53	6.88	1.95	3.52	6.04	1.72	3.51
20/15	8.86	2.21	4.00	7.94	1.96	4.04	7.06	1.75	4.04	6.19	1.53	4.05
25/18	9.01	2.03	4.43	8.04	1.79	4.50	7.13	1.58	4.53	6.28	1.38	4.55
35/24	9.20	1.88	4.91	8.23	1.65	4.98	7.27	1.45	5.00	6.40	1.27	5.03
OAT	Load											
	60%			50%			40%			30%		
	HC	PI	COP	HC	PI	COP	HC	PI	COP	HC	PI	COP
-25/-	3.09	2.52	1.23	2.61	2.13	1.23	2.09	1.78	1.18	1.57	1.36	1.15
-20/-	3.89	2.44	1.59	3.30	2.10	1.57	2.69	1.72	1.56	2.03	1.31	1.54
-15/-	4.34	2.38	1.83	3.69	2.02	1.83	2.97	1.66	1.79	2.27	1.28	1.77
-10/-	4.70	2.31	2.03	4.02	1.98	2.03	3.21	1.60	2.00	2.49	1.27	1.96
-7/-8	4.94	2.21	2.23	4.22	1.88	2.24	3.38	1.57	2.16	2.64	1.23	2.15
2/1	5.07	1.82	2.79	4.25	1.53	2.78	3.45	1.27	2.70	2.71	1.00	2.71
7/6	5.13	1.50	3.42	4.29	1.26	3.40	3.44	0.93	3.71	2.75	0.70	3.93
15/12	5.16	1.47	3.52	4.36	1.24	3.50	3.47	1.01	3.43	2.71	0.79	3.42
20/15	5.30	1.31	4.06	4.47	1.11	4.04	3.59	0.90	4.00	2.75	0.71	3.86
25/18	5.36	1.18	4.54	4.59	1.01	4.53	3.65	0.82	4.46	2.86	0.66	4.35
35/24	5.43	1.08	5.03	4.78	0.93	5.15	3.72	0.75	4.95	2.86	0.60	4.74
OAT	Load											
	20%			10%			-			-		
	HC	PI	COP	HC	PI	COP	-			-		
-25/-	1.11	0.97	1.14	0.77	0.70	1.10	-	-	-	-	-	-
-20/-	1.40	0.95	1.48	0.97	0.69	1.42	-	-	-	-	-	-
-15/-	1.58	0.92	1.72	1.07	0.66	1.61	-	-	-	-	-	-
-10/-	1.72	0.90	1.92	1.18	0.64	1.84	-	-	-	-	-	-
-7/-8	1.82	0.85	2.14	1.25	0.62	2.01	-	-	-	-	-	-
2/1	1.88	0.70	2.70	1.25	0.50	2.50	-	-	-	-	-	-
7/6	1.91	0.59	3.24	1.31	0.41	3.20	-	-	-	-	-	-
15/12	1.95	0.57	3.43	1.30	0.41	3.20	-	-	-	-	-	-
20/15	1.93	0.51	3.79	1.35	0.36	3.73	-	-	-	-	-	-
25/18	1.94	0.47	4.16	1.34	0.32	4.18	-	-	-	-	-	-
35/24	1.98	0.43	4.65	1.36	0.30	4.57	-	-	-	-	-	-

OAT: Outdoor ambient temperature
HC: Heating capacity
PI: Power input

Part load heat capacity table with at LWT=55℃ (Peak)

OAT	Load											
	100%			90%			80%			70%		
	HC	PI	COP	HC	PI	COP	HC	PI	COP	HC	PI	COP
-25/-	-	-	-	-	-	-	-	-	-	-	-	-
-20/-	5.61	5.22	1.07	5.05	4.71	1.07	4.58	4.19	1.09	4.01	3.67	1.09
-15/-	6.36	5.04	1.26	5.73	4.54	1.26	5.17	4.05	1.28	4.54	3.54	1.28
-10/-	7.19	4.77	1.51	6.50	4.32	1.51	5.82	3.83	1.52	5.05	3.35	1.51
-7/-8	7.49	4.06	1.85	6.76	3.65	1.85	6.05	3.26	1.86	5.31	2.85	1.86
2/1	7.79	3.91	1.99	7.03	3.51	2.01	6.27	3.11	2.02	5.53	2.73	2.02
7/6	8.11	3.05	2.66	7.30	2.73	2.67	6.49	2.42	2.68	5.73	2.14	2.68
15/12	8.29	2.98	2.78	7.42	2.64	2.81	6.63	2.37	2.80	5.82	2.09	2.79
20/15	8.62	2.62	3.29	7.74	2.33	3.33	6.87	2.07	3.33	6.03	1.81	3.33
25/18	8.71	2.37	3.67	7.78	2.09	3.73	6.90	1.84	3.75	6.07	1.61	3.77
35/24	8.77	2.19	4.00	7.84	1.93	4.07	6.93	1.70	4.08	6.10	1.49	4.10
OAT	Load											
	60%			50%			40%			30%		
	HC	PI	COP	HC	PI	COP	HC	PI	COP	HC	PI	COP
-25/-	-	-	-	-	-	-	-	-	-	-	-	-
-20/-	3.45	3.13	1.10	2.92	2.69	1.09	2.38	2.21	1.08	1.80	1.69	1.06
-15/-	3.91	3.03	1.29	3.32	2.57	1.29	2.68	2.12	1.26	2.04	1.63	1.25
-10/-	4.37	2.87	1.52	3.74	2.46	1.52	2.98	1.99	1.50	2.32	1.57	1.47
-7/-8	4.55	2.43	1.87	3.89	2.07	1.88	3.12	1.72	1.81	2.43	1.35	1.80
2/1	4.74	2.34	2.02	3.97	1.97	2.01	3.22	1.64	1.96	2.53	1.29	1.96
7/6	4.92	1.83	2.68	4.11	1.54	2.67	3.29	1.28	2.57	2.64	1.04	2.54
15/12	4.98	1.78	2.80	4.20	1.51	2.79	3.34	1.22	2.73	2.61	0.96	2.72
20/15	5.17	1.55	3.34	4.36	1.31	3.32	3.49	1.06	3.29	2.67	0.84	3.18
25/18	5.18	1.38	3.77	4.44	1.18	3.75	3.53	0.95	3.70	2.76	0.77	3.60
35/24	5.18	1.26	4.11	4.56	1.09	4.20	3.54	0.88	4.04	2.73	0.71	3.87
OAT	Load											
	20%			10%			-			-		
	HC	PI	COP	HC	PI	COP	-			-		
-25/-	-	-	-	-	-	-	-	-	-	-	-	-
-20/-	1.25	1.22	1.02	0.86	0.88	0.98	-	-	-	-	-	-
-15/-	1.42	1.17	1.21	0.96	0.84	1.14	-	-	-	-	-	-
-10/-	1.60	1.12	1.44	1.10	0.80	1.38	-	-	-	-	-	-
-7/-8	1.68	0.94	1.79	1.15	0.69	1.68	-	-	-	-	-	-
2/1	1.76	0.90	1.96	1.17	0.64	1.81	-	-	-	-	-	-
7/6	1.82	0.72	2.54	1.26	0.50	2.51	-	-	-	-	-	-
15/12	1.88	0.69	2.73	1.25	0.49	2.54	-	-	-	-	-	-
20/15	1.88	0.60	3.12	1.31	0.43	3.07	-	-	-	-	-	-
25/18	1.87	0.54	3.45	1.30	0.37	3.46	-	-	-	-	-	-
35/24	1.89	0.50	3.79	1.30	0.35	3.73	-	-	-	-	-	-

OAT: Outdoor ambient temperature
HC: Heating capacity
PI: Power input

Cooing

Part load heat capacity table with at LWT=18℃

OAT	Load											
	100%			90%			80%			70%		
	HC	PI	COP	HC	PI	COP	HC	PI	COP	HC	PI	COP
-5/-0	9.13	0.85	10.71	8.22	0.77	10.70	7.44	0.68	10.87	6.53	0.60	10.96
0/-	8.96	0.93	9.64	8.07	0.84	9.61	7.31	0.75	9.81	6.40	0.65	9.80
5/-	8.71	1.14	7.62	7.85	1.03	7.63	7.09	0.92	7.71	6.23	0.80	7.75
10/0	8.67	1.38	6.28	7.83	1.25	6.28	7.01	1.11	6.33	6.08	0.97	6.28
15/5	8.61	1.55	5.55	7.77	1.40	5.56	6.96	1.25	5.58	6.10	1.09	5.59
20/10	8.29	1.59	5.21	7.48	1.43	5.24	6.67	1.26	5.28	5.89	1.11	5.29
25/15	8.23	1.67	4.92	7.40	1.50	4.95	6.58	1.33	4.96	5.81	1.17	4.95
30/20	7.94	1.73	4.58	7.10	1.53	4.63	6.34	1.37	4.62	5.57	1.21	4.60
35/24	7.56	1.81	4.17	6.78	1.61	4.22	6.03	1.43	4.22	5.28	1.25	4.22
40/28	7.22	1.84	3.93	6.45	1.61	4.00	5.72	1.42	4.02	5.03	1.25	4.04
45/30	6.68	1.94	3.45	5.97	1.71	3.50	5.28	1.50	3.51	4.64	1.31	3.53
50/33	5.78	2.13	2.71	5.17	1.88	2.75	4.56	1.65	2.76	4.02	1.45	2.78
OAT	Load											
	60%			50%			40%			30%		
	HC	PI	COP	HC	PI	COP	HC	PI	COP	HC	PI	COP
-5/-0	5.66	0.51	11.03	4.79	0.43	11.03	3.83	0.36	10.58	2.87	0.28	10.38
0/-	5.51	0.56	9.88	4.67	0.48	9.75	3.81	0.39	9.69	2.87	0.30	9.55
5/-	5.36	0.69	7.79	4.55	0.58	7.79	3.67	0.48	7.63	2.80	0.37	7.55
10/0	5.27	0.83	6.35	4.51	0.71	6.34	3.60	0.58	6.25	2.79	0.46	6.13
15/5	5.23	0.93	5.62	4.48	0.79	5.64	3.58	0.66	5.43	2.80	0.52	5.41
20/10	5.05	0.95	5.29	4.23	0.80	5.26	3.43	0.67	5.12	2.69	0.52	5.13
25/15	4.98	1.00	4.97	4.17	0.84	4.94	3.34	0.70	4.75	2.67	0.57	4.70
30/20	4.76	1.03	4.62	4.02	0.87	4.59	3.20	0.71	4.50	2.50	0.56	4.48
35/24	4.53	1.07	4.23	3.82	0.91	4.21	3.06	0.73	4.17	2.34	0.58	4.03
40/28	4.30	1.07	4.03	3.68	0.92	4.02	2.93	0.74	3.96	2.29	0.59	3.86
45/30	3.94	1.11	3.54	3.47	0.96	3.62	2.70	0.78	3.48	2.08	0.62	3.33
50/33	3.41	1.23	2.78	3.00	1.06	2.85	2.33	0.85	2.74	1.80	0.69	2.62
OAT	Load											
	20%			10%			-			-		
	HC	PI	COP	HC	PI	COP	-			-		
-5/-0	2.03	0.20	10.29	1.41	0.14	9.88	-	-	-	-	-	-
0/-	1.99	0.22	9.19	1.38	0.16	8.79	-	-	-	-	-	-
5/-	1.94	0.27	7.32	1.31	0.19	6.89	-	-	-	-	-	-
10/0	1.93	0.32	5.99	1.33	0.23	5.76	-	-	-	-	-	-
15/5	1.93	0.36	5.38	1.33	0.26	5.05	-	-	-	-	-	-
20/10	1.87	0.37	5.12	1.24	0.26	4.74	-	-	-	-	-	-
25/15	1.85	0.39	4.71	1.27	0.27	4.65	-	-	-	-	-	-
30/20	1.80	0.40	4.50	1.20	0.29	4.19	-	-	-	-	-	-
35/24	1.65	0.42	3.95	1.15	0.30	3.89	-	-	-	-	-	-
40/28	1.55	0.42	3.69	1.08	0.29	3.71	-	-	-	-	-	-
45/30	1.44	0.44	3.26	0.99	0.31	3.21	-	-	-	-	-	-
50/33	1.24	0.48	2.57	0.86	0.34	2.52						

OAT: Outdoor ambient temperature
CC: Cooling capacity
PI: Power input

Part load heat capacity table with at LWT=7℃

OAT	Load											
	100%			90%			80%			70%		
	HC	PI	COP	HC	PI	COP	HC	PI	COP	HC	PI	COP
-5/-0	-	-	-	-	-	-	-	-	-	-	-	-
0/-	-	-	-	-	-	-	-	-	-	-	-	-
5/-	-	-	-	-	-	-	-	-	-	-	-	-
10/0	-	-	-	-	-	-	-	-	-	-	-	-
15/5	8.01	2.06	3.89	7.24	1.86	3.89	6.48	1.65	3.92	5.62	1.45	3.89
20/10	7.71	2.11	3.65	6.96	1.90	3.66	6.23	1.69	3.68	5.47	1.48	3.69
25/15	7.65	2.22	3.45	6.91	1.99	3.47	6.16	1.76	3.49	5.43	1.55	3.50
30/20	7.50	2.30	3.27	6.75	2.05	3.29	6.00	1.82	3.30	5.30	1.61	3.29
35/24	7.02	2.56	2.75	6.28	2.26	2.78	5.61	2.03	2.77	4.93	1.79	2.76
40/28	6.72	2.61	2.57	6.02	2.32	2.60	5.35	2.06	2.60	4.70	1.80	2.61
45/30	6.21	2.68	2.32	5.55	2.35	2.36	4.92	2.08	2.37	4.33	1.82	2.38
50/33	5.37	2.76	1.95	4.80	2.43	1.98	4.24	2.14	1.98	3.73	1.87	1.99
OAT	Load											
	60%			50%			40%			30%		
	HC	PI	COP	HC	PI	COP	HC	PI	COP	HC	PI	COP
-5/-0	-	-	-	-	-	-	-	-	-	-	-	-
0/-	-	-	-	-	-	-	-	-	-	-	-	-
5/-	-	-	-	-	-	-	-	-	-	-	-	-
10/0	-	-	-	-	-	-	-	-	-	-	-	-
15/5	4.87	1.24	3.93	4.16	1.06	3.93	3.32	0.86	3.87	2.58	0.68	3.80
20/10	4.69	1.27	3.70	4.01	1.08	3.72	3.21	0.90	3.58	2.51	0.70	3.57
25/15	4.66	1.33	3.50	3.90	1.12	3.48	3.17	0.93	3.39	2.49	0.73	3.40
30/20	4.55	1.38	3.30	3.80	1.16	3.28	3.05	0.96	3.16	2.44	0.78	3.12
35/24	4.21	1.52	2.77	3.55	1.29	2.75	2.83	1.05	2.70	2.21	0.82	2.69
40/28	4.02	1.54	2.61	3.39	1.31	2.60	2.72	1.06	2.57	2.08	0.84	2.48
45/30	3.70	1.55	2.38	3.17	1.34	2.37	2.52	1.08	2.34	1.97	0.87	2.28
50/33	3.17	1.59	2.00	2.79	1.37	2.04	2.17	1.10	1.96	1.67	0.89	1.88
OAT	Load											
	20%			10%			-			-		
	HC	PI	COP	HC	PI	COP	-			-		
-5/-0	-	-	-	-	-	-	-	-	-	-	-	-
0/-	-	-	-	-	-	-	-	-	-	-	-	-
5/-	-	-	-	-	-	-	-	-	-	-	-	-
10/0	-	-	-	-	-	-	-	-	-	-	-	-
15/5	1.79	0.48	3.71	1.22	0.34	3.56	-	-	-	-	-	-
20/10	1.73	0.49	3.54	1.19	0.36	3.33	-	-	-	-	-	-
25/15	1.73	0.51	3.39	1.15	0.37	3.14	-	-	-	-	-	-
30/20	1.69	0.54	3.13	1.16	0.38	3.09	-	-	-	-	-	-
35/24	1.59	0.59	2.70	1.06	0.42	2.51	-	-	-	-	-	-
40/28	1.46	0.60	2.44	1.02	0.43	2.40	-	-	-	-	-	-
45/30	1.34	0.61	2.18	0.93	0.42	2.19	-	-	-	-	-	-
50/33	1.16	0.63	1.84	0.80	0.44	1.81	-	-	-	-	-	-

OAT: Outdoor ambient temperature
CC: Cooling capacity
PI: Power input

Model: 10kW
Heating
Part load heat capacity table with at LWT=35℃ (Peak)

OAT	Load											
	100%			90%			80%			70%		
	HC	PI	COP	HC	PI	COP	HC	PI	COP	HC	PI	COP
-25/-	6.88	4.82	1.43	6.20	4.35	1.43	5.61	3.87	1.45	4.93	3.37	1.46
-20/-	8.02	4.61	1.74	7.22	4.16	1.73	6.55	3.70	1.77	5.73	3.24	1.77
-15/-	8.83	4.43	1.99	7.96	3.99	2.00	7.19	3.56	2.02	6.31	3.11	2.03
-10/-	9.54	4.06	2.35	8.62	3.67	2.35	7.72	3.26	2.37	6.70	2.85	2.35
-7/-8	9.77	3.82	2.56	8.82	3.44	2.56	7.90	3.07	2.57	6.93	2.69	2.58
2/1	10.69	3.41	3.14	9.65	3.06	3.15	8.61	2.71	3.17	7.59	2.39	3.18
7/6	10.84	2.54	4.26	9.76	2.28	4.29	8.67	2.02	4.30	7.66	1.78	4.29
15/12	11.07	2.44	4.54	9.91	2.16	4.59	8.84	1.94	4.57	7.77	1.71	4.56
20/15	11.29	2.32	4.86	10.12	2.06	4.92	8.99	1.83	4.92	7.89	1.60	4.93
25/18	11.72	2.14	5.48	10.46	1.88	5.57	9.28	1.66	5.60	8.17	1.45	5.62
35/24	12.07	1.99	6.07	10.79	1.75	6.17	9.53	1.54	6.19	8.39	1.35	6.22
OAT	Load											
	60%			50%			40%			30%		
	HC	PI	COP	HC	PI	COP	HC	PI	COP	HC	PI	COP
-25/-	4.27	2.90	1.47	3.61	2.46	1.47	2.89	2.05	1.41	2.17	1.57	1.38
-20/-	4.94	2.77	1.78	4.18	2.37	1.76	3.41	1.95	1.75	2.57	1.49	1.72
-15/-	5.43	2.66	2.04	4.61	2.26	2.04	3.72	1.86	2.00	2.83	1.43	1.98
-10/-	5.80	2.44	2.37	4.96	2.09	2.37	3.96	1.69	2.34	3.07	1.34	2.29
-7/-8	5.94	2.29	2.59	5.08	1.95	2.60	4.07	1.62	2.50	3.18	1.27	2.50
2/1	6.51	2.05	3.18	5.45	1.72	3.17	4.43	1.44	3.08	3.47	1.13	3.09
7/6	6.57	1.53	4.31	5.50	1.28	4.28	4.40	0.94	4.68	3.52	0.71	4.95
15/12	6.64	1.45	4.57	5.60	1.23	4.55	4.46	1.00	4.46	3.49	0.79	4.44
20/15	6.76	1.37	4.94	5.70	1.16	4.91	4.57	0.94	4.86	3.50	0.74	4.70
25/18	6.97	1.24	5.62	5.98	1.07	5.60	4.75	0.86	5.52	3.71	0.69	5.38
35/24	7.12	1.14	6.23	6.28	0.98	6.38	4.88	0.80	6.13	3.75	0.64	5.86
OAT	Load											
	20%			10%			-			-		
	HC	PI	COP	HC	PI	COP	-			-		
-25/-	1.53	1.11	1.37	1.07	0.81	1.32	-	-	-	-	-	-
-20/-	1.78	1.07	1.66	1.24	0.78	1.59	-	-	-	-	-	-
-15/-	1.97	1.03	1.92	1.33	0.74	1.80	-	-	-	-	-	-
-10/-	2.13	0.95	2.24	1.46	0.68	2.15	-	-	-	-	-	-
-7/-8	2.19	0.88	2.48	1.51	0.65	2.33	-	-	-	-	-	-
2/1	2.42	0.78	3.08	1.60	0.56	2.85	-	-	-	-	-	-
7/6	2.44	0.60	4.08	1.68	0.42	4.03	-	-	-	-	-	-
15/12	2.51	0.56	4.46	1.67	0.40	4.15	-	-	-	-	-	-
20/15	2.46	0.53	4.61	1.72	0.38	4.54	-	-	-	-	-	-
25/18	2.52	0.49	5.14	1.75	0.34	5.17	-	-	-	-	-	-
35/24	2.59	0.45	5.75	1.79	0.32	5.65	-	-	-	-	-	-

OAT: Outdoor ambient temperature
HC: Heating capacity
PI: Power input

Part load heat capacity table with at LWT=45℃ (Peak)

OAT	Load											
	100%			90%			80%			70%		
	HC	PI	COP	HC	PI	COP	HC	PI	COP	HC	PI	COP
-25/-	6.37	5.57	1.14	5.74	5.03	1.14	5.19	4.48	1.16	4.56	3.90	1.17
-20/-	7.77	5.42	1.43	6.99	4.90	1.43	6.34	4.35	1.46	5.54	3.81	1.46
-15/-	8.48	5.27	1.61	7.65	4.75	1.61	6.90	4.24	1.63	6.06	3.71	1.64
-10/-	9.04	4.86	1.86	8.17	4.40	1.86	7.31	3.90	1.88	6.35	3.41	1.86
-7/-8	9.35	4.32	2.16	8.44	3.89	2.17	7.56	3.47	2.18	6.63	3.04	2.18
2/1	10.43	3.94	2.64	9.42	3.54	2.66	8.40	3.14	2.68	7.41	2.76	2.68
7/6	10.80	3.26	3.32	9.72	2.92	3.33	8.64	2.58	3.35	7.62	2.28	3.34
15/12	10.88	3.15	3.46	9.74	2.78	3.50	8.69	2.50	3.48	7.64	2.20	3.47
20/15	11.07	2.95	3.75	9.93	2.62	3.79	8.82	2.33	3.79	7.74	2.04	3.80
25/18	11.26	2.71	4.15	10.05	2.38	4.22	8.92	2.10	4.24	7.85	1.84	4.26
35/24	11.50	2.50	4.60	10.28	2.20	4.67	9.09	1.94	4.69	7.99	1.70	4.71
OAT	Load											
	60%			50%			40%			30%		
	HC	PI	COP	HC	PI	COP	HC	PI	COP	HC	PI	COP
-25/-	3.95	3.36	1.18	3.34	2.84	1.18	2.68	2.37	1.13	2.01	1.81	1.11
-20/-	4.78	3.25	1.47	4.05	2.79	1.45	3.30	2.29	1.44	2.48	1.75	1.42
-15/-	5.22	3.17	1.65	4.43	2.69	1.65	3.57	2.21	1.61	2.72	1.71	1.59
-10/-	5.50	2.92	1.88	4.70	2.50	1.88	3.75	2.03	1.85	2.91	1.60	1.82
-7/-8	5.69	2.59	2.19	4.86	2.21	2.20	3.89	1.84	2.12	3.04	1.44	2.11
2/1	6.35	2.37	2.68	5.32	1.99	2.67	4.32	1.66	2.60	3.39	1.30	2.60
7/6	6.54	1.95	3.35	5.48	1.64	3.33	4.38	1.21	3.64	3.51	0.91	3.85
15/12	6.53	1.87	3.49	5.51	1.59	3.46	4.38	1.29	3.40	3.43	1.01	3.38
20/15	6.63	1.74	3.81	5.59	1.48	3.79	4.48	1.20	3.75	3.43	0.95	3.62
25/18	6.70	1.57	4.26	5.74	1.35	4.24	4.56	1.09	4.18	3.57	0.88	4.08
35/24	6.79	1.44	4.72	5.98	1.24	4.83	4.65	1.00	4.65	3.58	0.81	4.44
OAT	Load											
	20%			10%			-			-		
	HC	PI	COP	HC	PI	COP	-			-		
-25/-	1.41	1.29	1.10	0.99	0.94	1.05	-	-	-	-	-	-
-20/-	1.72	1.26	1.36	1.20	0.92	1.30	-	-	-	-	-	-
-15/-	1.89	1.22	1.55	1.28	0.88	1.45	-	-	-	-	-	-
-10/-	2.02	1.14	1.77	1.38	0.81	1.71	-	-	-	-	-	-
-7/-8	2.10	1.00	2.10	1.44	0.73	1.97	-	-	-	-	-	-
2/1	2.36	0.91	2.60	1.56	0.65	2.40	-	-	-	-	-	-
7/6	2.43	0.77	3.17	1.67	0.53	3.13	-	-	-	-	-	-
15/12	2.47	0.73	3.40	1.64	0.52	3.16	-	-	-	-	-	-
20/15	2.41	0.68	3.55	1.68	0.48	3.50	-	-	-	-	-	-
25/18	2.42	0.62	3.90	1.68	0.43	3.92	-	-	-	-	-	-
35/24	2.47	0.57	4.36	1.70	0.40	4.28	-	-	-	-	-	-

OAT: Outdoor ambient temperature
HC: Heating capacity
PI: Power input

Part load heat capacity table with at LWT=55℃ (Peak)

OAT	Load											
	100%			90%			80%			70%		
	HC	PI	COP	HC	PI	COP	HC	PI	COP	HC	PI	COP
-25/-	-	-	-	-	-	-	-	-	-	-	-	-
-20/-	6.75	6.09	1.11	6.08	5.50	1.11	5.51	4.88	1.13	4.82	4.28	1.13
-15/-	8.02	5.93	1.35	7.23	5.34	1.36	6.53	4.77	1.37	5.73	4.17	1.38
-10/-	8.51	5.60	1.52	7.69	5.07	1.52	6.88	4.49	1.53	5.97	3.93	1.52
-7/-8	8.66	4.81	1.80	7.82	4.33	1.80	7.00	3.86	1.81	6.14	3.38	1.82
2/1	10.03	4.79	2.09	9.06	4.30	2.11	8.07	3.81	2.12	7.12	3.35	2.12
7/6	10.32	4.07	2.54	9.29	3.64	2.55	8.26	3.22	2.56	7.29	2.85	2.56
15/12	10.54	3.92	2.69	9.43	3.47	2.72	8.42	3.11	2.71	7.40	2.74	2.70
20/15	10.77	3.46	3.11	9.66	3.07	3.14	8.58	2.73	3.15	7.53	2.39	3.15
25/18	10.98	3.14	3.50	9.81	2.76	3.56	8.70	2.43	3.58	7.66	2.13	3.60
35/24	11.07	2.90	3.82	9.90	2.55	3.88	8.75	2.24	3.90	7.69	1.96	3.92
OAT	Load											
	60%			50%			40%			30%		
	HC	PI	COP	HC	PI	COP	HC	PI	COP	HC	PI	COP
-25/-	-	-	-	-	-	-	-	-	-	-	-	-
-20/-	4.15	3.65	1.14	3.52	3.14	1.12	2.87	2.58	1.11	2.16	1.97	1.10
-15/-	4.93	3.56	1.38	4.19	3.02	1.38	3.38	2.49	1.36	2.57	1.92	1.34
-10/-	5.17	3.37	1.54	4.43	2.88	1.54	3.53	2.33	1.51	2.74	1.85	1.48
-7/-8	5.27	2.89	1.82	4.50	2.46	1.83	3.60	2.04	1.76	2.82	1.60	1.76
2/1	6.11	2.87	2.13	5.12	2.42	2.12	4.15	2.02	2.06	3.26	1.58	2.06
7/6	6.26	2.44	2.56	5.23	2.05	2.55	4.19	1.71	2.45	3.36	1.38	2.43
15/12	6.32	2.33	2.71	5.33	1.98	2.69	4.25	1.61	2.64	3.32	1.26	2.63
20/15	6.45	2.04	3.16	5.44	1.73	3.14	4.36	1.40	3.11	3.34	1.11	3.00
25/18	6.54	1.82	3.59	5.60	1.56	3.58	4.45	1.26	3.53	3.48	1.01	3.44
35/24	6.53	1.67	3.92	5.76	1.43	4.02	4.47	1.16	3.86	3.44	0.93	3.69
OAT	Load											
	20%			10%			-			-		
	HC	PI	COP	HC	PI	COP	-			-		
-25/-	-	-	-	-	-	-	-	-	-	-	-	-
-20/-	1.50	1.42	1.06	1.04	1.03	1.01	-	-	-	-	-	-
-15/-	1.79	1.38	1.30	1.21	0.99	1.22	-	-	-	-	-	-
-10/-	1.90	1.31	1.45	1.30	0.93	1.39	-	-	-	-	-	-
-7/-8	1.94	1.11	1.75	1.33	0.81	1.64	-	-	-	-	-	-
2/1	2.27	1.10	2.06	1.50	0.79	1.90	-	-	-	-	-	-
7/6	2.32	0.96	2.43	1.60	0.67	2.40	-	-	-	-	-	-
15/12	2.39	0.91	2.64	1.59	0.65	2.46	-	-	-	-	-	-
20/15	2.35	0.80	2.95	1.64	0.56	2.90	-	-	-	-	-	-
25/18	2.36	0.72	3.29	1.64	0.50	3.30	-	-	-	-	-	-
35/24	2.38	0.66	3.62	1.64	0.46	3.56	-	-	-	-	-	-

OAT: Outdoor ambient temperature
HC: Heating capacity
PI: Power input

Cooing

Part load heat capacity table with at LWT=18℃

OAT	Load											
	100%			90%			80%			70%		
	HC	PI	COP	HC	PI	COP	HC	PI	COP	HC	PI	COP
-5/-0	11.65	1.23	9.46	10.49	1.11	9.45	9.49	0.99	9.60	8.34	0.86	9.68
0/-	11.31	1.32	8.60	10.18	1.19	8.57	9.23	1.05	8.75	8.08	0.92	8.74
5/-	10.99	1.62	6.79	9.91	1.46	6.81	8.95	1.30	6.88	7.86	1.14	6.91
10/0	10.94	1.95	5.60	9.89	1.77	5.60	8.85	1.57	5.64	7.68	1.37	5.60
15/5	10.86	2.20	4.95	9.80	1.98	4.95	8.78	1.76	4.98	7.70	1.54	4.99
20/10	10.46	2.25	4.65	9.45	2.02	4.67	8.42	1.79	4.71	7.43	1.58	4.71
25/15	10.38	2.37	4.39	9.34	2.12	4.41	8.30	1.88	4.42	7.33	1.66	4.42
30/20	10.01	2.45	4.09	8.96	2.17	4.13	8.00	1.94	4.12	7.03	1.71	4.10
35/24	9.54	2.57	3.72	8.56	2.28	3.76	7.60	2.02	3.76	6.67	1.77	3.77
40/28	9.11	2.60	3.51	8.14	2.28	3.56	7.22	2.01	3.58	6.35	1.76	3.60
45/30	8.50	2.77	3.07	7.60	2.44	3.12	6.72	2.15	3.13	5.91	1.88	3.15
50/33	6.90	3.09	2.23	6.17	2.72	2.27	5.45	2.39	2.28	4.80	2.09	2.29
OAT	Load											
	60%			50%			40%			30%		
	HC	PI	COP	HC	PI	COP	HC	PI	COP	HC	PI	COP
-5/-0	7.22	0.74	9.74	6.11	0.63	9.74	4.89	0.52	9.35	3.67	0.40	9.17
0/-	6.96	0.79	8.81	5.89	0.68	8.70	4.81	0.56	8.64	3.62	0.42	8.52
5/-	6.76	0.97	6.95	5.74	0.83	6.95	4.63	0.68	6.81	3.53	0.52	6.73
10/0	6.65	1.17	5.66	5.69	1.01	5.66	4.54	0.81	5.58	3.52	0.64	5.47
15/5	6.60	1.32	5.01	5.65	1.12	5.03	4.52	0.93	4.84	3.53	0.73	4.83
20/10	6.37	1.35	4.72	5.33	1.14	4.69	4.33	0.95	4.57	3.40	0.74	4.58
25/15	6.29	1.42	4.43	5.26	1.20	4.40	4.21	0.99	4.24	3.37	0.80	4.19
30/20	6.01	1.46	4.12	5.07	1.24	4.09	4.04	1.00	4.02	3.15	0.79	4.00
35/24	5.71	1.51	3.78	4.82	1.28	3.76	3.86	1.04	3.72	2.96	0.82	3.59
40/28	5.42	1.51	3.60	4.65	1.30	3.58	3.69	1.04	3.53	2.89	0.84	3.44
45/30	5.02	1.59	3.15	4.42	1.37	3.22	3.43	1.11	3.10	2.64	0.89	2.96
50/33	4.07	1.78	2.29	3.59	1.53	2.35	2.79	1.24	2.26	2.15	0.99	2.16
OAT	Load											
	20%			10%			-			-		
	HC	PI	COP	HC	PI	COP	-			-		
-5/-0	2.59	0.28	9.09	1.81	0.21	8.73	-	-	-	-	-	-
0/-	2.51	0.31	8.19	1.74	0.22	7.83	-	-	-	-	-	-
5/-	2.45	0.38	6.53	1.66	0.27	6.14	-	-	-	-	-	-
10/0	2.44	0.46	5.34	1.67	0.33	5.13	-	-	-	-	-	-
15/5	2.43	0.51	4.80	1.67	0.37	4.51	-	-	-	-	-	-
20/10	2.36	0.52	4.57	1.57	0.37	4.22	-	-	-	-	-	-
25/15	2.34	0.56	4.20	1.61	0.39	4.15	-	-	-	-	-	-
30/20	2.27	0.57	4.02	1.51	0.40	3.74	-	-	-	-	-	-
35/24	2.08	0.59	3.53	1.45	0.42	3.47	-	-	-	-	-	-
40/28	1.96	0.60	3.29	1.36	0.41	3.31	-	-	-	-	-	-
45/30	1.83	0.63	2.91	1.26	0.44	2.86	-	-	-	-	-	-
50/33	1.48	0.70	2.12	1.02	0.49	2.08						

OAT: Outdoor ambient temperature
CC: Cooling capacity
PI: Power input

Part load heat capacity table with at LWT=7℃

OAT	Load											
	100%			90%			80%			70%		
	HC	PI	COP	HC	PI	COP	HC	PI	COP	HC	PI	COP
-5/-0	-	-	-	-	-	-	-	-	-	-	-	-
0/-	-	-	-	-	-	-	-	-	-	-	-	-
5/-	-	-	-	-	-	-	-	-	-	-	-	-
10/0	-	-	-	-	-	-	-	-	-	-	-	-
15/5	10.10	2.62	3.85	9.13	2.37	3.85	8.17	2.11	3.88	7.09	1.84	3.85
20/10	9.79	2.70	3.63	8.84	2.43	3.63	7.91	2.17	3.65	6.94	1.90	3.66
25/15	9.65	2.78	3.47	8.72	2.50	3.49	7.77	2.21	3.51	6.85	1.95	3.52
30/20	9.06	2.90	3.13	8.16	2.59	3.15	7.25	2.30	3.16	6.40	2.03	3.15
35/24	8.48	3.04	2.79	7.59	2.69	2.82	6.78	2.41	2.81	5.95	2.12	2.80
40/28	8.20	3.45	2.38	7.36	3.06	2.41	6.54	2.72	2.41	5.73	2.38	2.41
45/30	7.56	3.61	2.09	6.75	3.18	2.12	5.99	2.80	2.14	5.27	2.45	2.15
50/33	5.90	3.91	1.51	5.28	3.44	1.53	4.66	3.03	1.54	4.10	2.65	1.55
OAT	Load											
	60%			50%			40%			30%		
	HC	PI	COP	HC	PI	COP	HC	PI	COP	HC	PI	COP
-5/-0	-	-	-	-	-	-	-	-	-	-	-	-
0/-	-	-	-	-	-	-	-	-	-	-	-	-
5/-	-	-	-	-	-	-	-	-	-	-	-	-
10/0	-	-	-	-	-	-	-	-	-	-	-	-
15/5	6.14	1.58	3.89	5.25	1.35	3.89	4.19	1.09	3.83	3.25	0.87	3.76
20/10	5.95	1.62	3.67	5.09	1.38	3.69	4.07	1.15	3.55	3.18	0.90	3.54
25/15	5.88	1.67	3.52	4.92	1.40	3.50	4.00	1.17	3.41	3.14	0.92	3.42
30/20	5.49	1.74	3.16	4.59	1.46	3.14	3.68	1.22	3.03	2.95	0.98	2.99
35/24	5.09	1.81	2.81	4.29	1.54	2.79	3.42	1.25	2.74	2.67	0.98	2.73
40/28	4.91	2.03	2.42	4.14	1.72	2.40	3.32	1.40	2.38	2.54	1.11	2.30
45/30	4.50	2.10	2.15	3.85	1.80	2.14	3.06	1.45	2.11	2.40	1.17	2.05
50/33	3.48	2.25	1.55	3.07	1.93	1.59	2.39	1.56	1.53	1.84	1.26	1.46
OAT	Load											
	20%			10%			-			-		
	HC	PI	COP	HC	PI	COP	-			-		
-5/-0	-	-	-	-	-	-	-	-	-	-	-	-
0/-	-	-	-	-	-	-	-	-	-	-	-	-
5/-	-	-	-	-	-	-	-	-	-	-	-	-
10/0	-	-	-	-	-	-	-	-	-	-	-	-
15/5	2.25	0.61	3.67	1.55	0.44	3.53	-	-	-	-	-	-
20/10	2.19	0.62	3.52	1.51	0.46	3.30	-	-	-	-	-	-
25/15	2.18	0.64	3.41	1.45	0.46	3.15	-	-	-	-	-	-
30/20	2.04	0.68	3.00	1.40	0.47	2.96	-	-	-	-	-	-
35/24	1.92	0.70	2.74	1.28	0.50	2.55	-	-	-	-	-	-
40/28	1.79	0.79	2.26	1.25	0.56	2.22	-	-	-	-	-	-
45/30	1.62	0.83	1.96	1.13	0.57	1.97	-	-	-	-	-	-
50/33	1.27	0.89	1.43	0.87	0.62	1.41	-	-	-	-	-	-

OAT: Outdoor ambient temperature
CC: Cooling capacity
PI: Power input

Model: 12kW
Heating
Part load heat capacity table with at LWT=35℃ (Peak)

OAT	Load											
	100%			90%			80%			70%		
	HC	PI	COP	HC	PI	COP	HC	PI	COP	HC	PI	COP
-25/-	7.77	5.36	1.45	7.00	4.83	1.45	6.33	4.30	1.47	5.56	3.75	1.48
-20/-	9.73	5.12	1.90	8.76	4.63	1.89	7.94	4.11	1.93	6.95	3.60	1.93
-15/-	10.97	4.92	2.23	9.90	4.43	2.23	8.93	3.96	2.26	7.85	3.46	2.27
-10/-	12.13	4.85	2.50	10.96	4.39	2.50	9.81	3.89	2.52	8.51	3.41	2.50
-7/-8	12.57	4.75	2.65	11.34	4.28	2.65	10.16	3.81	2.67	8.91	3.34	2.67
2/1	12.86	3.99	3.22	11.61	3.58	3.24	10.35	3.17	3.26	9.13	2.79	3.27
7/6	13.02	2.84	4.59	11.72	2.54	4.61	10.42	2.25	4.63	9.20	1.99	4.62
15/12	13.23	2.71	4.88	11.84	2.40	4.93	10.57	2.15	4.92	9.29	1.90	4.90
20/15	13.49	2.58	5.23	12.10	2.29	5.29	10.75	2.03	5.29	9.43	1.78	5.30
25/18	14.01	2.38	5.89	12.51	2.09	5.99	11.09	1.84	6.02	9.76	1.61	6.05
35/24	14.36	2.21	6.50	12.84	1.94	6.60	11.34	1.71	6.62	9.98	1.50	6.66
OAT	Load											
	60%			50%			40%			30%		
	HC	PI	COP	HC	PI	COP	HC	PI	COP	HC	PI	COP
-25/-	4.82	3.22	1.49	4.08	2.73	1.49	3.26	2.28	1.43	2.45	1.74	1.41
-20/-	5.98	3.07	1.95	5.07	2.64	1.92	4.14	2.17	1.91	3.11	1.65	1.88
-15/-	6.75	2.96	2.28	5.73	2.51	2.28	4.62	2.07	2.23	3.52	1.59	2.21
-10/-	7.37	2.92	2.53	6.31	2.50	2.53	5.03	2.02	2.49	3.91	1.60	2.44
-7/-8	7.64	2.85	2.68	6.54	2.43	2.70	5.23	2.02	2.59	4.09	1.58	2.58
2/1	7.83	2.39	3.27	6.56	2.02	3.25	5.32	1.68	3.17	4.18	1.32	3.17
7/6	7.89	1.70	4.63	6.60	1.43	4.61	5.29	1.05	5.03	4.23	0.79	5.32
15/12	7.94	1.61	4.92	6.69	1.37	4.89	5.33	1.11	4.80	4.17	0.87	4.77
20/15	8.08	1.52	5.31	6.81	1.29	5.28	5.46	1.04	5.23	4.18	0.83	5.05
25/18	8.33	1.38	6.04	7.14	1.19	6.02	5.67	0.96	5.94	4.44	0.77	5.78
35/24	8.47	1.27	6.67	7.47	1.09	6.83	5.80	0.88	6.56	4.47	0.71	6.28
OAT	Load											
	20%			10%			-			-		
	HC	PI	COP	HC	PI	COP	-			-		
-25/-	1.72	1.24	1.39	1.20	0.90	1.34	-	-	-	-	-	-
-20/-	2.16	1.19	1.81	1.50	0.87	1.73	-	-	-	-	-	-
-15/-	2.45	1.14	2.14	1.66	0.82	2.02	-	-	-	-	-	-
-10/-	2.70	1.13	2.38	1.86	0.81	2.29	-	-	-	-	-	-
-7/-8	2.82	1.10	2.57	1.94	0.80	2.41	-	-	-	-	-	-
2/1	2.91	0.92	3.17	1.93	0.66	2.93	-	-	-	-	-	-
7/6	2.93	0.67	4.39	2.02	0.47	4.34	-	-	-	-	-	-
15/12	3.00	0.63	4.79	2.00	0.45	4.46	-	-	-	-	-	-
20/15	2.94	0.59	4.96	2.05	0.42	4.88	-	-	-	-	-	-
25/18	3.01	0.54	5.53	2.09	0.38	5.56	-	-	-	-	-	-
35/24	3.09	0.50	6.16	2.13	0.35	6.05	-	-	-	-	-	-

OAT: Outdoor ambient temperature
HC: Heating capacity
PI: Power input

Part load heat capacity table with at LWT=45℃ (Peak)

OAT	Load											
	100%			90%			80%			70%		
	HC	PI	COP	HC	PI	COP	HC	PI	COP	HC	PI	COP
-25/-	7.30	6.19	1.18	6.58	5.59	1.18	5.95	4.97	1.20	5.23	4.34	1.21
-20/-	9.20	6.03	1.53	8.28	5.44	1.52	7.51	4.83	1.55	6.57	4.23	1.55
-15/-	10.55	5.86	1.80	9.52	5.27	1.81	8.59	4.71	1.82	7.55	4.12	1.83
-10/-	10.80	5.40	2.00	9.77	4.88	2.00	8.74	4.33	2.02	7.58	3.79	2.00
-7/-8	11.61	5.03	2.31	10.48	4.53	2.31	9.38	4.04	2.32	8.23	3.54	2.33
2/1	12.31	4.38	2.81	11.12	3.94	2.82	9.91	3.48	2.84	8.74	3.07	2.85
7/6	12.73	3.82	3.33	11.46	3.42	3.35	10.18	3.03	3.36	8.99	2.68	3.36
15/12	12.98	3.50	3.71	11.62	3.09	3.75	10.37	2.77	3.74	9.11	2.44	3.73
20/15	13.23	3.28	4.03	11.87	2.91	4.08	10.55	2.59	4.08	9.25	2.26	4.09
25/18	13.46	3.01	4.47	12.02	2.65	4.54	10.66	2.34	4.56	9.38	2.05	4.58
35/24	13.75	2.78	4.95	12.29	2.45	5.03	10.86	2.15	5.04	9.55	1.88	5.07
OAT	Load											
	60%			50%			40%			30%		
	HC	PI	COP	HC	PI	COP	HC	PI	COP	HC	PI	COP
-25/-	4.53	3.73	1.21	3.83	3.16	1.21	3.07	2.63	1.16	2.30	2.01	1.14
-20/-	5.66	3.62	1.57	4.79	3.10	1.54	3.91	2.55	1.53	2.94	1.95	1.51
-15/-	6.49	3.52	1.84	5.51	2.99	1.84	4.44	2.46	1.81	3.39	1.90	1.78
-10/-	6.57	3.25	2.02	5.62	2.78	2.02	4.48	2.25	1.99	3.48	1.78	1.95
-7/-8	7.06	3.02	2.34	6.04	2.57	2.35	4.83	2.14	2.26	3.77	1.67	2.25
2/1	7.50	2.63	2.85	6.28	2.21	2.84	5.10	1.85	2.76	4.00	1.45	2.77
7/6	7.71	2.29	3.37	6.45	1.93	3.35	5.17	1.41	3.66	4.14	1.07	3.87
15/12	7.79	2.08	3.74	6.57	1.77	3.72	5.23	1.43	3.65	4.09	1.13	3.63
20/15	7.93	1.94	4.09	6.68	1.64	4.07	5.36	1.33	4.03	4.10	1.05	3.89
25/18	8.01	1.75	4.58	6.86	1.50	4.56	5.45	1.21	4.50	4.27	0.97	4.38
35/24	8.11	1.60	5.08	7.15	1.38	5.20	5.55	1.11	5.00	4.28	0.89	4.78
OAT	Load											
	20%			10%			-			-		
	HC	PI	COP	HC	PI	COP	-			-		
-25/-	1.62	1.43	1.13	1.13	1.04	1.09	-	-	-	-	-	-
-20/-	2.04	1.40	1.45	1.42	1.02	1.39	-	-	-	-	-	-
-15/-	2.35	1.36	1.73	1.59	0.98	1.63	-	-	-	-	-	-
-10/-	2.41	1.26	1.91	1.65	0.90	1.83	-	-	-	-	-	-
-7/-8	2.60	1.16	2.24	1.79	0.85	2.10	-	-	-	-	-	-
2/1	2.78	1.01	2.76	1.85	0.72	2.55	-	-	-	-	-	-
7/6	2.86	0.90	3.19	1.97	0.63	3.15	-	-	-	-	-	-
15/12	2.95	0.81	3.65	1.96	0.58	3.40	-	-	-	-	-	-
20/15	2.88	0.75	3.82	2.01	0.53	3.76	-	-	-	-	-	-
25/18	2.89	0.69	4.19	2.01	0.48	4.21	-	-	-	-	-	-
35/24	2.96	0.63	4.69	2.03	0.44	4.60	-	-	-	-	-	-

OAT: Outdoor ambient temperature
HC: Heating capacity
PI: Power input

Part load heat capacity table with at LWT=55℃ (Peak)

OAT	Load											
	100%			90%			80%			70%		
	HC	PI	COP	HC	PI	COP	HC	PI	COP	HC	PI	COP
-25/-	-	-	-	-	-	-	-	-	-	-	-	-
-20/-	8.33	6.76	1.23	7.50	6.11	1.23	6.80	5.43	1.25	5.95	4.75	1.25
-15/-	9.50	6.59	1.44	8.57	5.93	1.44	7.73	5.30	1.46	6.79	4.63	1.47
-10/-	10.08	6.22	1.62	9.11	5.63	1.62	8.15	4.99	1.63	7.07	4.37	1.62
-7/-8	10.68	5.50	1.94	9.64	4.96	1.94	8.63	4.42	1.95	7.57	3.87	1.96
2/1	11.72	5.07	2.31	10.58	4.56	2.32	9.43	4.03	2.34	8.32	3.55	2.34
7/6	12.19	4.56	2.67	10.97	4.08	2.69	9.75	3.62	2.69	8.61	3.20	2.69
15/12	12.56	4.36	2.88	11.24	3.86	2.91	10.04	3.46	2.90	8.82	3.05	2.89
20/15	12.90	3.85	3.35	11.57	3.41	3.39	10.28	3.03	3.39	9.02	2.66	3.40
25/18	13.01	3.48	3.73	11.61	3.06	3.79	10.30	2.70	3.82	9.07	2.37	3.83
35/24	13.11	3.22	4.07	11.72	2.83	4.14	10.36	2.49	4.15	9.11	2.18	4.18
OAT	Load											
	60%			50%			40%			30%		
	HC	PI	COP	HC	PI	COP	HC	PI	COP	HC	PI	COP
-25/-	-	-	-	-	-	-	-	-	-	-	-	-
-20/-	5.12	4.06	1.26	4.34	3.48	1.25	3.54	2.86	1.24	2.67	2.19	1.22
-15/-	5.84	3.96	1.48	4.96	3.36	1.48	4.00	2.77	1.44	3.05	2.13	1.43
-10/-	6.13	3.74	1.64	5.24	3.20	1.64	4.18	2.59	1.61	3.24	2.05	1.58
-7/-8	6.49	3.30	1.97	5.55	2.81	1.98	4.44	2.34	1.90	3.47	1.83	1.89
2/1	7.14	3.04	2.34	5.98	2.56	2.33	4.85	2.14	2.27	3.81	1.67	2.28
7/6	7.39	2.74	2.70	6.18	2.30	2.68	4.95	1.92	2.58	3.96	1.55	2.55
15/12	7.54	2.59	2.91	6.36	2.20	2.89	5.06	1.79	2.83	3.96	1.40	2.82
20/15	7.73	2.27	3.40	6.52	1.92	3.39	5.23	1.56	3.35	4.00	1.24	3.24
25/18	7.74	2.02	3.83	6.63	1.74	3.82	5.27	1.40	3.76	4.12	1.13	3.66
35/24	7.73	1.85	4.18	6.82	1.59	4.28	5.30	1.29	4.11	4.08	1.04	3.93
OAT	Load											
	20%			10%			-			-		
	HC	PI	COP	HC	PI	COP	-			-		
-25/-	-	-	-	-	-	-	-	-	-	-	-	-
-20/-	1.85	1.58	1.17	1.28	1.14	1.12	-	-	-	-	-	-
-15/-	2.12	1.53	1.39	1.43	1.10	1.30	-	-	-	-	-	-
-10/-	2.25	1.46	1.54	1.54	1.04	1.48	-	-	-	-	-	-
-7/-8	2.39	1.27	1.88	1.64	0.93	1.77	-	-	-	-	-	-
2/1	2.65	1.17	2.27	1.76	0.84	2.10	-	-	-	-	-	-
7/6	2.74	1.07	2.56	1.89	0.75	2.52	-	-	-	-	-	-
15/12	2.85	1.01	2.83	1.90	0.72	2.64	-	-	-	-	-	-
20/15	2.81	0.89	3.18	1.96	0.63	3.13	-	-	-	-	-	-
25/18	2.80	0.80	3.51	1.94	0.55	3.52	-	-	-	-	-	-
35/24	2.82	0.73	3.86	1.94	0.51	3.79	-	-	-	-	-	-

OAT: Outdoor ambient temperature
HC: Heating capacity
PI: Power input

Cooing

Part load heat capacity table with at LWT=18℃

OAT	Load											
	100%			90%			80%			70%		
	HC	PI	COP	HC	PI	COP	HC	PI	COP	HC	PI	COP
-5/-0	14.10	1.46	9.64	12.71	1.32	9.63	11.49	1.17	9.78	10.10	1.02	9.86
0/-	13.69	1.74	7.88	12.32	1.57	7.85	11.17	1.39	8.02	9.78	1.22	8.01
5/-	13.30	1.91	6.97	12.00	1.72	6.99	10.83	1.53	7.06	9.51	1.34	7.09
10/0	13.24	2.30	5.75	11.97	2.08	5.75	10.71	1.85	5.80	9.29	1.62	5.75
15/5	13.15	2.59	5.08	11.87	2.33	5.09	10.63	2.08	5.11	9.32	1.82	5.12
20/10	12.66	2.65	4.77	11.44	2.38	4.80	10.19	2.11	4.83	8.99	1.86	4.84
25/15	12.57	2.79	4.50	11.31	2.50	4.53	10.05	2.21	4.54	8.87	1.96	4.53
30/20	12.12	2.89	4.20	10.85	2.56	4.24	9.69	2.29	4.23	8.51	2.02	4.21
35/24	11.55	3.03	3.82	10.36	2.68	3.86	9.21	2.38	3.86	8.07	2.09	3.87
40/28	11.03	3.10	3.56	9.85	2.73	3.61	8.74	2.40	3.64	7.69	2.11	3.65
45/30	10.20	3.37	3.03	9.12	2.96	3.08	8.06	2.61	3.09	7.09	2.28	3.11
50/33	8.99	3.64	2.47	8.04	3.20	2.51	7.10	2.82	2.52	6.25	2.47	2.53
OAT	Load											
	60%			50%			40%			30%		
	HC	PI	COP	HC	PI	COP	HC	PI	COP	HC	PI	COP
-5/-0	8.74	0.88	9.93	7.40	0.75	9.92	5.92	0.62	9.53	4.44	0.48	9.34
0/-	8.42	1.04	8.08	7.13	0.90	7.97	5.82	0.74	7.92	4.38	0.56	7.81
5/-	8.18	1.15	7.13	6.94	0.97	7.14	5.60	0.80	6.99	4.27	0.62	6.91
10/0	8.05	1.39	5.81	6.88	1.19	5.81	5.49	0.96	5.72	4.26	0.76	5.61
15/5	8.00	1.55	5.15	6.84	1.32	5.17	5.47	1.10	4.97	4.27	0.86	4.96
20/10	7.71	1.59	4.84	6.46	1.34	4.82	5.24	1.12	4.69	4.12	0.88	4.70
25/15	7.62	1.67	4.55	6.37	1.41	4.52	5.10	1.17	4.35	4.08	0.95	4.30
30/20	7.27	1.72	4.23	6.13	1.46	4.20	4.89	1.18	4.12	3.82	0.93	4.10
35/24	6.92	1.78	3.88	5.83	1.51	3.86	4.68	1.23	3.82	3.58	0.97	3.69
40/28	6.57	1.80	3.65	5.63	1.55	3.64	4.47	1.25	3.58	3.50	1.00	3.49
45/30	6.02	1.94	3.11	5.31	1.67	3.18	4.12	1.35	3.06	3.17	1.08	2.93
50/33	5.30	2.09	2.53	4.67	1.80	2.59	3.63	1.46	2.49	2.80	1.17	2.38
OAT	Load											
	20%			10%			-			-		
	HC	PI	COP	HC	PI	COP	-			-		
-5/-0	3.13	0.34	9.26	2.19	0.25	8.89	-	-	-	-	-	-
0/-	3.04	0.40	7.51	2.11	0.29	7.18	-	-	-	-	-	-
5/-	2.97	0.44	6.70	2.01	0.32	6.30	-	-	-	-	-	-
10/0	2.95	0.54	5.48	2.03	0.38	5.27	-	-	-	-	-	-
15/5	2.95	0.60	4.92	2.03	0.44	4.63	-	-	-	-	-	-
20/10	2.86	0.61	4.69	1.90	0.44	4.34	-	-	-	-	-	-
25/15	2.83	0.66	4.31	1.95	0.46	4.26	-	-	-	-	-	-
30/20	2.75	0.67	4.12	1.83	0.48	3.84	-	-	-	-	-	-
35/24	2.52	0.70	3.62	1.76	0.49	3.56	-	-	-	-	-	-
40/28	2.37	0.71	3.34	1.64	0.49	3.35	-	-	-	-	-	-
45/30	2.19	0.76	2.87	1.51	0.54	2.82	-	-	-	-	-	-
50/33	1.93	0.83	2.34	1.33	0.58	2.30						

OAT: Outdoor ambient temperature
CC: Cooling capacity
PI: Power input

Part load heat capacity table with at LWT=7℃

OAT	Load											
	100%			90%			80%			70%		
	HC	PI	COP	HC	PI	COP	HC	PI	COP	HC	PI	COP
-5/-0	-	-	-	-	-	-	-	-	-	-	-	-
0/-	-	-	-	-	-	-	-	-	-	-	-	-
5/-	-	-	-	-	-	-	-	-	-	-	-	-
10/0	-	-	-	-	-	-	-	-	-	-	-	-
15/5	12.23	3.43	3.56	11.06	3.11	3.56	9.89	2.76	3.59	8.59	2.41	3.56
20/10	11.78	3.52	3.35	10.63	3.17	3.35	9.52	2.83	3.37	8.35	2.47	3.37
25/15	11.69	3.70	3.16	10.55	3.32	3.18	9.41	2.94	3.20	8.30	2.59	3.20
30/20	11.46	3.97	2.89	10.32	3.55	2.90	9.17	3.15	2.91	8.09	2.78	2.91
35/24	11.03	4.20	2.63	9.87	3.72	2.65	8.81	3.33	2.64	7.74	2.94	2.64
40/28	10.31	4.30	2.40	9.25	3.81	2.42	8.22	3.39	2.42	7.21	2.97	2.43
45/30	9.49	4.42	2.15	8.47	3.89	2.18	7.52	3.43	2.19	6.61	3.00	2.20
50/33	8.07	4.61	1.75	7.22	4.06	1.78	6.38	3.57	1.79	5.61	3.13	1.80
OAT	Load											
	60%			50%			40%			30%		
	HC	PI	COP	HC	PI	COP	HC	PI	COP	HC	PI	COP
-5/-0	-	-	-	-	-	-	-	-	-	-	-	-
0/-	-	-	-	-	-	-	-	-	-	-	-	-
5/-	-	-	-	-	-	-	-	-	-	-	-	-
10/0	-	-	-	-	-	-	-	-	-	-	-	-
15/5	7.44	2.07	3.60	6.36	1.77	3.60	5.08	1.43	3.54	3.94	1.13	3.48
20/10	7.16	2.11	3.39	6.12	1.80	3.40	4.90	1.50	3.28	3.83	1.17	3.27
25/15	7.12	2.22	3.21	5.96	1.87	3.19	4.84	1.56	3.11	3.80	1.22	3.11
30/20	6.95	2.38	2.92	5.81	2.01	2.90	4.65	1.67	2.79	3.73	1.35	2.76
35/24	6.62	2.50	2.65	5.58	2.12	2.63	4.44	1.72	2.58	3.47	1.35	2.57
40/28	6.18	2.54	2.43	5.21	2.15	2.42	4.18	1.74	2.40	3.20	1.38	2.32
45/30	5.65	2.56	2.20	4.84	2.21	2.19	3.84	1.78	2.16	3.01	1.43	2.11
50/33	4.76	2.65	1.80	4.20	2.28	1.84	3.26	1.84	1.77	2.51	1.48	1.69
OAT	Load											
	20%			10%			-			-		
	HC	PI	COP	HC	PI	COP	-			-		
-5/-0	-	-	-	-	-	-	-	-	-	-	-	-
0/-	-	-	-	-	-	-	-	-	-	-	-	-
5/-	-	-	-	-	-	-	-	-	-	-	-	-
10/0	-	-	-	-	-	-	-	-	-	-	-	-
15/5	2.73	0.80	3.39	1.87	0.57	3.26	-	-	-	-	-	-
20/10	2.64	0.81	3.24	1.81	0.59	3.05	-	-	-	-	-	-
25/15	2.64	0.85	3.10	1.75	0.61	2.87	-	-	-	-	-	-
30/20	2.58	0.93	2.76	1.78	0.65	2.73	-	-	-	-	-	-
35/24	2.50	0.97	2.58	1.66	0.69	2.40	-	-	-	-	-	-
40/28	2.25	0.99	2.27	1.57	0.70	2.24	-	-	-	-	-	-
45/30	2.04	1.01	2.01	1.41	0.70	2.02	-	-	-	-	-	-
50/33	1.74	1.05	1.66	1.20	0.73	1.63	-	-	-	-	-	-

OAT: Outdoor ambient temperature
CC: Cooling capacity
PI: Power input

Model: 14kW

Heating

Part load heat capacity table with at LWT=35℃ (Peak)

OAT	Load											
	100%			90%			80%			70%		
	HC	PI	COP	HC	PI	COP	HC	PI	COP	HC	PI	COP
-25/-	9.13	6.44	1.42	8.23	5.81	1.42	7.44	5.17	1.44	6.54	4.51	1.45
-20/-	11.19	6.16	1.82	10.07	5.56	1.81	9.13	4.94	1.85	7.99	4.33	1.85
-15/-	12.80	5.92	2.16	11.55	5.33	2.17	10.42	4.76	2.19	9.15	4.16	2.20
-10/-	13.33	5.42	2.46	12.05	4.91	2.45	10.78	4.35	2.48	9.36	3.81	2.45
-7/-8	13.52	5.10	2.65	12.20	4.59	2.66	10.93	4.09	2.67	9.59	3.58	2.68
2/1	14.40	4.59	3.13	13.00	4.12	3.15	11.59	3.65	3.17	10.22	3.22	3.18
7/6	15.16	3.41	4.45	13.65	3.05	4.48	12.13	2.70	4.49	10.71	2.39	4.48
15/12	15.44	3.26	4.73	13.82	2.89	4.79	12.33	2.59	4.77	10.84	2.28	4.75
20/15	15.74	3.10	5.08	14.12	2.75	5.13	12.54	2.44	5.13	11.00	2.14	5.14
25/18	16.34	2.86	5.72	14.59	2.51	5.81	12.94	2.22	5.84	11.39	1.94	5.87
35/24	16.45	2.66	6.19	14.70	2.34	6.29	12.99	2.06	6.31	11.43	1.80	6.35
OAT	Load											
	60%			50%			40%			30%		
	HC	PI	COP	HC	PI	COP	HC	PI	COP	HC	PI	COP
-25/-	5.66	3.88	1.46	4.79	3.29	1.46	3.83	2.74	1.40	2.88	2.09	1.37
-20/-	6.88	3.70	1.86	5.83	3.17	1.84	4.76	2.61	1.83	3.58	1.99	1.80
-15/-	7.87	3.56	2.21	6.68	3.02	2.21	5.39	2.49	2.17	4.11	1.92	2.14
-10/-	8.10	3.26	2.48	6.93	2.79	2.48	5.53	2.26	2.45	4.29	1.79	2.40
-7/-8	8.22	3.06	2.69	7.03	2.60	2.70	5.62	2.17	2.60	4.39	1.70	2.59
2/1	8.77	2.76	3.18	7.34	2.32	3.17	5.96	1.93	3.08	4.68	1.52	3.09
7/6	9.19	2.04	4.50	7.69	1.72	4.47	6.16	1.26	4.89	4.93	0.95	5.17
15/12	9.26	1.94	4.77	7.81	1.65	4.74	6.22	1.34	4.65	4.86	1.05	4.63
20/15	9.43	1.83	5.15	7.95	1.55	5.13	6.37	1.26	5.08	4.88	1.00	4.90
25/18	9.72	1.66	5.86	8.33	1.43	5.84	6.62	1.15	5.76	5.18	0.92	5.61
35/24	9.70	1.53	6.35	8.55	1.32	6.50	6.65	1.06	6.25	5.12	0.86	5.98
OAT	Load											
	20%			10%			-			-		
	HC	PI	COP	HC	PI	COP	-			-		
-25/-	2.03	1.49	1.36	1.42	1.08	1.31	-	-	-	-	-	-
-20/-	2.48	1.44	1.73	1.72	1.04	1.66	-	-	-	-	-	-
-15/-	2.85	1.37	2.08	1.93	0.99	1.96	-	-	-	-	-	-
-10/-	2.97	1.27	2.34	2.04	0.91	2.25	-	-	-	-	-	-
-7/-8	3.03	1.18	2.57	2.08	0.86	2.42	-	-	-	-	-	-
2/1	3.25	1.06	3.08	2.16	0.76	2.85	-	-	-	-	-	-
7/6	3.41	0.80	4.26	2.35	0.56	4.21	-	-	-	-	-	-
15/12	3.50	0.75	4.65	2.33	0.54	4.33	-	-	-	-	-	-
20/15	3.43	0.71	4.81	2.39	0.51	4.73	-	-	-	-	-	-
25/18	3.51	0.65	5.37	2.43	0.45	5.39	-	-	-	-	-	-
35/24	3.54	0.60	5.86	2.43	0.42	5.76	-	-	-	-	-	-

OAT: Outdoor ambient temperature
HC: Heating capacity
PI: Power input

Part load heat capacity table with at LWT=45℃ (Peak)

OAT	Load											
	100%			90%			80%			70%		
	HC	PI	COP	HC	PI	COP	HC	PI	COP	HC	PI	COP
-25/-	8.56	7.45	1.15	7.71	6.72	1.15	6.98	5.98	1.17	6.13	5.21	1.18
-20/-	10.89	7.25	1.50	9.80	6.54	1.50	8.88	5.81	1.53	7.77	5.09	1.53
-15/-	12.31	7.05	1.75	11.10	6.34	1.75	10.02	5.66	1.77	8.80	4.95	1.78
-10/-	12.44	6.46	1.92	11.25	5.85	1.92	10.07	5.19	1.94	8.73	4.54	1.92
-7/-8	12.53	5.49	2.28	11.31	4.95	2.28	10.12	4.41	2.29	8.88	3.86	2.30
2/1	13.79	5.13	2.69	12.45	4.61	2.70	11.10	4.08	2.72	9.79	3.59	2.73
7/6	14.68	4.49	3.27	13.21	4.02	3.29	11.74	3.56	3.30	10.36	3.15	3.29
15/12	15.21	4.14	3.68	13.61	3.66	3.72	12.15	3.28	3.70	10.68	2.89	3.69
20/15	15.44	3.95	3.91	13.85	3.50	3.96	12.30	3.11	3.96	10.79	2.72	3.96
25/18	15.70	3.62	4.33	14.02	3.19	4.40	12.43	2.81	4.43	10.94	2.46	4.45
35/24	16.04	3.34	4.80	14.34	2.94	4.88	12.67	2.59	4.89	11.15	2.27	4.92
OAT	Load											
	60%			50%			40%			30%		
	HC	PI	COP	HC	PI	COP	HC	PI	COP	HC	PI	COP
-25/-	5.31	4.48	1.18	4.49	3.80	1.18	3.60	3.17	1.14	2.70	2.42	1.11
-20/-	6.70	4.35	1.54	5.67	3.73	1.52	4.63	3.07	1.51	3.48	2.34	1.49
-15/-	7.57	4.23	1.79	6.43	3.59	1.79	5.18	2.96	1.75	3.95	2.28	1.73
-10/-	7.56	3.89	1.94	6.47	3.33	1.94	5.16	2.70	1.92	4.01	2.13	1.88
-7/-8	7.62	3.30	2.31	6.51	2.81	2.32	5.21	2.34	2.23	4.07	1.83	2.23
2/1	8.40	3.08	2.73	7.03	2.59	2.72	5.71	2.16	2.64	4.48	1.69	2.65
7/6	8.90	2.70	3.30	7.44	2.27	3.28	5.96	1.66	3.59	4.77	1.26	3.79
15/12	9.13	2.46	3.71	7.70	2.09	3.68	6.13	1.70	3.61	4.79	1.33	3.60
20/15	9.25	2.33	3.97	7.80	1.97	3.95	6.25	1.60	3.91	4.79	1.27	3.78
25/18	9.34	2.10	4.44	8.01	1.81	4.43	6.36	1.46	4.37	4.98	1.17	4.25
35/24	9.46	1.92	4.92	8.34	1.65	5.04	6.48	1.34	4.85	4.99	1.08	4.64
OAT	Load											
	20%			10%			-			-		
	HC	PI	COP	HC	PI	COP	-			-		
-25/-	1.90	1.72	1.10	1.33	1.25	1.06	-	-	-	-	-	-
-20/-	2.42	1.69	1.43	1.68	1.22	1.37	-	-	-	-	-	-
-15/-	2.75	1.63	1.68	1.86	1.18	1.58	-	-	-	-	-	-
-10/-	2.77	1.51	1.83	1.90	1.08	1.76	-	-	-	-	-	-
-7/-8	2.81	1.27	2.21	1.93	0.93	2.08	-	-	-	-	-	-
2/1	3.12	1.18	2.64	2.07	0.85	2.44	-	-	-	-	-	-
7/6	3.30	1.06	3.13	2.28	0.74	3.09	-	-	-	-	-	-
15/12	3.45	0.96	3.61	2.30	0.68	3.36	-	-	-	-	-	-
20/15	3.37	0.91	3.71	2.35	0.64	3.65	-	-	-	-	-	-
25/18	3.38	0.83	4.07	2.34	0.57	4.09	-	-	-	-	-	-
35/24	3.45	0.76	4.55	2.37	0.53	4.47	-	-	-	-	-	-

OAT: Outdoor ambient temperature
HC: Heating capacity
PI: Power input

Part load heat capacity table with at LWT=55℃ (Peak)

OAT	Load											
	100%			90%			80%			70%		
	HC	PI	COP	HC	PI	COP	HC	PI	COP	HC	PI	COP
-25/-	-	-	-	-	-	-	-	-	-	-	-	-
-20/-	9.33	8.21	1.14	8.39	7.41	1.13	7.61	6.58	1.16	6.66	5.76	1.15
-15/-	10.46	7.99	1.31	9.44	7.19	1.31	8.52	6.42	1.33	7.48	5.62	1.33
-10/-	10.74	7.05	1.52	9.71	6.38	1.52	8.69	5.66	1.54	7.54	4.95	1.52
-7/-8	11.24	6.04	1.86	10.14	5.44	1.86	9.08	4.85	1.87	7.97	4.24	1.88
2/1	12.56	5.74	2.19	11.34	5.15	2.20	10.11	4.56	2.22	8.92	4.02	2.22
7/6	12.89	5.04	2.56	11.60	4.51	2.57	10.31	4.00	2.58	9.10	3.53	2.58
15/12	14.25	4.80	2.97	12.76	4.24	3.01	11.39	3.80	2.99	10.01	3.35	2.98
20/15	14.81	4.67	3.17	13.28	4.14	3.21	11.80	3.68	3.21	10.35	3.22	3.21
25/18	15.17	4.23	3.59	13.55	3.71	3.65	12.02	3.28	3.67	10.58	2.87	3.69
35/24	15.29	3.90	3.92	13.67	3.44	3.98	12.08	3.03	3.99	10.63	2.65	4.02
OAT	Load											
	60%			50%			40%			30%		
	HC	PI	COP	HC	PI	COP	HC	PI	COP	HC	PI	COP
-25/-	-	-	-	-	-	-	-	-	-	-	-	-
-20/-	5.73	4.92	1.16	4.86	4.23	1.15	3.96	3.47	1.14	2.98	2.65	1.13
-15/-	6.44	4.80	1.34	5.46	4.08	1.34	4.41	3.36	1.31	3.36	2.59	1.30
-10/-	6.53	4.24	1.54	5.59	3.63	1.54	4.46	2.94	1.52	3.46	2.33	1.49
-7/-8	6.83	3.62	1.89	5.84	3.09	1.89	4.67	2.57	1.82	3.65	2.01	1.82
2/1	7.65	3.44	2.22	6.41	2.90	2.21	5.20	2.42	2.15	4.08	1.89	2.15
7/6	7.81	3.02	2.58	6.54	2.54	2.57	5.23	2.12	2.47	4.19	1.71	2.45
15/12	8.55	2.85	3.00	7.21	2.42	2.98	5.74	1.97	2.92	4.49	1.54	2.91
20/15	8.87	2.75	3.22	7.48	2.33	3.20	6.00	1.89	3.17	4.59	1.50	3.06
25/18	9.03	2.45	3.68	7.74	2.11	3.67	6.15	1.70	3.62	4.81	1.37	3.52
35/24	9.02	2.24	4.02	7.95	1.93	4.12	6.18	1.56	3.96	4.76	1.26	3.78
OAT	Load											
	20%			10%			-			-		
	HC	PI	COP	HC	PI	COP	-			-		
-25/-	-	-	-	-	-	-	-	-	-	-	-	-
-20/-	2.07	1.91	1.08	1.44	1.39	1.04	-	-	-	-	-	-
-15/-	2.33	1.85	1.26	1.58	1.33	1.18	-	-	-	-	-	-
-10/-	2.40	1.65	1.45	1.64	1.18	1.40	-	-	-	-	-	-
-7/-8	2.52	1.39	1.80	1.73	1.02	1.70	-	-	-	-	-	-
2/1	2.84	1.32	2.15	1.88	0.95	1.99	-	-	-	-	-	-
7/6	2.90	1.18	2.45	2.00	0.83	2.42	-	-	-	-	-	-
15/12	3.24	1.11	2.92	2.15	0.79	2.72	-	-	-	-	-	-
20/15	3.23	1.07	3.01	2.25	0.76	2.96	-	-	-	-	-	-
25/18	3.26	0.97	3.37	2.26	0.67	3.39	-	-	-	-	-	-
35/24	3.29	0.89	3.71	2.26	0.62	3.65	-	-	-	-	-	-

OAT: Outdoor ambient temperature
HC: Heating capacity
PI: Power input

Cooing

Part load heat capacity table with at LWT=18℃

OAT	Load											
	100%			90%			80%			70%		
	HC	PI	COP	HC	PI	COP	HC	PI	COP	HC	PI	COP
-5/-0	17.51	1.82	9.65	15.78	1.64	9.64	14.27	1.46	9.79	12.54	1.27	9.87
0/-	16.83	2.01	8.36	15.15	1.82	8.33	13.73	1.61	8.51	12.02	1.41	8.50
5/-	16.33	2.39	6.82	14.73	2.15	6.84	13.29	1.92	6.91	11.67	1.68	6.94
10/0	16.25	2.89	5.63	14.69	2.61	5.62	13.15	2.32	5.67	11.41	2.03	5.62
15/5	16.14	3.25	4.97	14.57	2.93	4.98	13.04	2.61	5.00	11.44	2.28	5.01
20/10	15.54	3.33	4.67	14.03	2.99	4.69	12.51	2.65	4.73	11.03	2.33	4.73
25/15	15.42	3.50	4.40	13.88	3.13	4.43	12.34	2.78	4.44	10.89	2.45	4.44
30/20	14.88	3.63	4.10	13.32	3.21	4.15	11.89	2.88	4.13	10.44	2.53	4.12
35/24	14.18	3.79	3.74	12.71	3.37	3.78	11.30	2.99	3.78	9.91	2.62	3.78
40/28	13.54	3.85	3.52	12.09	3.38	3.58	10.73	2.98	3.60	9.44	2.61	3.62
45/30	12.29	4.03	3.05	10.98	3.55	3.09	9.71	3.13	3.10	8.54	2.73	3.12
50/33	10.80	4.36	2.48	9.66	3.84	2.52	8.54	3.38	2.52	7.51	2.96	2.54
OAT	Load											
	60%			50%			40%			30%		
	HC	PI	COP	HC	PI	COP	HC	PI	COP	HC	PI	COP
-5/-0	10.86	1.09	9.94	9.19	0.93	9.93	7.36	0.77	9.54	5.52	0.59	9.35
0/-	10.35	1.21	8.57	8.77	1.04	8.46	7.15	0.85	8.40	5.39	0.65	8.28
5/-	10.04	1.44	6.98	8.52	1.22	6.98	6.87	1.01	6.84	5.24	0.78	6.76
10/0	9.88	1.74	5.68	8.45	1.49	5.68	6.74	1.20	5.60	5.23	0.95	5.49
15/5	9.81	1.95	5.03	8.39	1.66	5.05	6.71	1.38	4.86	5.25	1.08	4.85
20/10	9.46	2.00	4.74	7.93	1.68	4.71	6.43	1.40	4.59	5.05	1.10	4.60
25/15	9.35	2.10	4.45	7.82	1.77	4.42	6.26	1.47	4.26	5.01	1.19	4.21
30/20	8.93	2.16	4.14	7.53	1.83	4.11	6.00	1.49	4.03	4.69	1.17	4.01
35/24	8.49	2.24	3.79	7.16	1.90	3.77	5.74	1.54	3.74	4.39	1.22	3.61
40/28	8.06	2.23	3.61	6.91	1.92	3.60	5.48	1.55	3.55	4.29	1.24	3.46
45/30	7.25	2.32	3.13	6.39	2.00	3.20	4.96	1.61	3.08	3.82	1.30	2.94
50/33	6.37	2.51	2.54	5.62	2.16	2.60	4.37	1.74	2.50	3.36	1.40	2.39
OAT	Load											
	20%			10%			-			-		
	HC	PI	COP	HC	PI	COP	-			-		
-5/-0	3.89	0.42	9.27	2.71	0.30	8.90	-	-	-	-	-	-
0/-	3.74	0.47	7.97	2.59	0.34	7.62	-	-	-	-	-	-
5/-	3.64	0.56	6.56	2.47	0.40	6.17	-	-	-	-	-	-
10/0	3.62	0.68	5.36	2.49	0.48	5.16	-	-	-	-	-	-
15/5	3.62	0.75	4.82	2.49	0.55	4.53	-	-	-	-	-	-
20/10	3.51	0.77	4.59	2.33	0.55	4.24	-	-	-	-	-	-
25/15	3.47	0.82	4.22	2.39	0.57	4.16	-	-	-	-	-	-
30/20	3.38	0.84	4.03	2.25	0.60	3.76	-	-	-	-	-	-
35/24	3.09	0.87	3.54	2.15	0.62	3.48	-	-	-	-	-	-
40/28	2.91	0.88	3.31	2.02	0.61	3.32	-	-	-	-	-	-
45/30	2.64	0.92	2.88	1.82	0.64	2.84	-	-	-	-	-	-
50/33	2.32	0.99	2.35	1.60	0.69	2.31						

OAT: Outdoor ambient temperature
CC: Cooling capacity
PI: Power input

Part load heat capacity table with at LWT=7℃

OAT	Load											
	100%			90%			80%			70%		
	HC	PI	COP	HC	PI	COP	HC	PI	COP	HC	PI	COP
-5/-0	-	-	-	-	-	-	-	-	-	-	-	-
0/-	-	-	-	-	-	-	-	-	-	-	-	-
5/-	-	-	-	-	-	-	-	-	-	-	-	-
10/0	-	-	-	-	-	-	-	-	-	-	-	-
15/5	14.88	4.27	3.49	13.45	3.86	3.48	12.04	3.43	3.51	10.44	3.00	3.48
20/10	14.37	4.38	3.29	12.97	3.94	3.29	11.61	3.51	3.31	10.19	3.08	3.31
25/15	13.71	4.60	2.98	12.38	4.13	3.00	11.04	3.66	3.02	9.74	3.22	3.02
30/20	13.25	4.76	2.78	11.93	4.26	2.80	10.60	3.78	2.81	9.36	3.34	2.80
35/24	12.60	4.84	2.60	11.28	4.28	2.63	10.07	3.84	2.62	8.85	3.38	2.61
40/28	12.14	5.22	2.32	10.89	4.63	2.35	9.67	4.11	2.35	8.48	3.60	2.36
45/30	11.28	5.54	2.04	10.07	4.87	2.07	8.93	4.29	2.08	7.86	3.76	2.09
50/33	9.77	5.80	1.68	8.73	5.10	1.71	7.71	4.49	1.72	6.79	3.93	1.73
OAT	Load											
	60%			50%			40%			30%		
	HC	PI	COP	HC	PI	COP	HC	PI	COP	HC	PI	COP
-5/-0	-	-	-	-	-	-	-	-	-	-	-	-
0/-	-	-	-	-	-	-	-	-	-	-	-	-
5/-	-	-	-	-	-	-	-	-	-	-	-	-
10/0	-	-	-	-	-	-	-	-	-	-	-	-
15/5	9.05	2.57	3.52	7.74	2.20	3.52	6.17	1.78	3.47	4.79	1.41	3.40
20/10	8.74	2.63	3.33	7.47	2.24	3.34	5.98	1.86	3.22	4.67	1.46	3.21
25/15	8.35	2.76	3.03	6.99	2.32	3.01	5.68	1.94	2.93	4.46	1.52	2.94
30/20	8.03	2.86	2.81	6.72	2.41	2.79	5.38	2.00	2.69	4.31	1.62	2.66
35/24	7.56	2.88	2.63	6.38	2.44	2.61	5.08	1.98	2.56	3.97	1.56	2.55
40/28	7.27	3.08	2.36	6.13	2.61	2.35	4.92	2.11	2.32	3.76	1.68	2.25
45/30	6.71	3.21	2.09	5.75	2.76	2.08	4.57	2.23	2.05	3.57	1.79	2.00
50/33	5.76	3.33	1.73	5.08	2.87	1.77	3.95	2.32	1.70	3.04	1.87	1.63
OAT	Load											
	20%			10%			-			-		
	HC	PI	COP	HC	PI	COP	-			-		
-5/-0	-	-	-	-	-	-	-	-	-	-	-	-
0/-	-	-	-	-	-	-	-	-	-	-	-	-
5/-	-	-	-	-	-	-	-	-	-	-	-	-
10/0	-	-	-	-	-	-	-	-	-	-	-	-
15/5	3.32	1.00	3.32	2.28	0.71	3.19	-	-	-	-	-	-
20/10	3.22	1.01	3.19	2.21	0.74	2.99	-	-	-	-	-	-
25/15	3.10	1.06	2.93	2.06	0.76	2.71	-	-	-	-	-	-
30/20	2.98	1.12	2.66	2.05	0.78	2.63	-	-	-	-	-	-
35/24	2.86	1.12	2.56	1.90	0.80	2.38	-	-	-	-	-	-
40/28	2.65	1.20	2.20	1.84	0.85	2.17	-	-	-	-	-	-
45/30	2.42	1.27	1.91	1.68	0.87	1.92	-	-	-	-	-	-
50/33	2.10	1.32	1.59	1.45	0.92	1.57	-	-	-	-	-	-

OAT: Outdoor ambient temperature
CC: Cooling capacity
PI: Power input

Model: 16kW

Heating

Part load heat capacity table with at LWT=35℃ (Peak)

OAT	Load											
	100%			90%			80%			70%		
	HC	PI	COP	HC	PI	COP	HC	PI	COP	HC	PI	COP
-25/-	11.06	7.28	1.52	9.97	6.57	1.52	9.01	5.85	1.54	7.92	5.10	1.55
-20/-	12.55	6.96	1.80	11.30	6.29	1.80	10.24	5.58	1.83	8.96	4.89	1.83
-15/-	14.36	6.69	2.15	12.95	6.02	2.15	11.69	5.38	2.17	10.27	4.70	2.18
-10/-	14.95	6.13	2.44	13.51	5.55	2.44	12.09	4.92	2.46	10.49	4.31	2.44
-7/-8	14.31	5.60	2.56	12.91	5.05	2.56	11.56	4.50	2.57	10.15	3.94	2.58
2/1	15.37	4.92	3.12	13.88	4.42	3.14	12.37	3.91	3.16	10.91	3.44	3.17
7/6	17.00	3.85	4.42	15.30	3.44	4.44	13.60	3.05	4.46	12.00	2.70	4.45
15/12	17.31	3.69	4.70	15.50	3.26	4.75	13.83	2.92	4.73	12.15	2.58	4.72
20/15	17.51	3.50	5.00	15.71	3.11	5.05	13.96	2.76	5.05	12.24	2.42	5.06
25/18	17.80	3.23	5.51	15.90	2.84	5.60	14.10	2.50	5.63	12.41	2.19	5.66
35/24	18.01	3.00	6.00	16.10	2.64	6.09	14.23	2.33	6.11	12.52	2.04	6.15
OAT	Load											
	60%			50%			40%			30%		
	HC	PI	COP	HC	PI	COP	HC	PI	COP	HC	PI	COP
-25/-	6.86	4.38	1.56	5.81	3.71	1.56	4.65	3.09	1.50	3.48	2.37	1.47
-20/-	7.72	4.18	1.85	6.54	3.59	1.82	5.33	2.95	1.81	4.02	2.25	1.79
-15/-	8.83	4.02	2.20	7.50	3.41	2.20	6.04	2.81	2.15	4.61	2.17	2.13
-10/-	9.09	3.69	2.46	7.77	3.16	2.46	6.20	2.56	2.43	4.81	2.02	2.38
-7/-8	8.70	3.36	2.59	7.44	2.86	2.60	5.95	2.38	2.50	4.65	1.86	2.49
2/1	9.36	2.95	3.17	7.84	2.49	3.15	6.36	2.07	3.07	5.00	1.62	3.08
7/6	10.30	2.31	4.46	8.62	1.94	4.44	6.90	1.42	4.85	5.53	1.08	5.13
15/12	10.39	2.19	4.74	8.76	1.86	4.71	6.98	1.51	4.62	5.45	1.19	4.60
20/15	10.49	2.07	5.07	8.84	1.75	5.05	7.09	1.42	5.00	5.43	1.12	4.83
25/18	10.59	1.87	5.65	9.08	1.61	5.63	7.21	1.30	5.55	5.64	1.04	5.41
35/24	10.63	1.73	6.15	9.37	1.49	6.30	7.28	1.20	6.06	5.60	0.97	5.79
OAT	Load											
	20%			10%			-			-		
	HC	PI	COP	HC	PI	COP	-			-		
-25/-	2.46	1.68	1.46	1.71	1.22	1.40	-	-	-	-	-	-
-20/-	2.79	1.62	1.72	1.93	1.18	1.64	-	-	-	-	-	-
-15/-	3.20	1.55	2.06	2.17	1.12	1.94	-	-	-	-	-	-
-10/-	3.33	1.43	2.32	2.29	1.02	2.23	-	-	-	-	-	-
-7/-8	3.21	1.29	2.48	2.20	0.95	2.33	-	-	-	-	-	-
2/1	3.47	1.13	3.07	2.31	0.81	2.84	-	-	-	-	-	-
7/6	3.83	0.90	4.23	2.64	0.63	4.18	-	-	-	-	-	-
15/12	3.93	0.85	4.62	2.61	0.61	4.30	-	-	-	-	-	-
20/15	3.82	0.81	4.74	2.66	0.57	4.66	-	-	-	-	-	-
25/18	3.83	0.74	5.17	2.65	0.51	5.20	-	-	-	-	-	-
35/24	3.87	0.68	5.68	2.67	0.48	5.58	-	-	-	-	-	-

OAT: Outdoor ambient temperature
HC: Heating capacity
PI: Power input

Part load heat capacity table with at LWT=45℃ (Peak)

OAT	Load											
	100%			90%			80%			70%		
	HC	PI	COP	HC	PI	COP	HC	PI	COP	HC	PI	COP
-25/-	10.20	8.42	1.21	9.19	7.59	1.21	8.31	6.76	1.23	7.30	5.89	1.24
-20/-	12.21	8.19	1.49	10.99	7.40	1.49	9.96	6.57	1.52	8.72	5.75	1.52
-15/-	13.81	7.96	1.73	12.46	7.17	1.74	11.24	6.40	1.76	9.87	5.60	1.76
-10/-	13.96	7.31	1.91	12.62	6.61	1.91	11.29	5.87	1.92	9.80	5.13	1.91
-7/-8	14.05	6.21	2.26	12.68	5.60	2.27	11.35	4.99	2.28	9.96	4.37	2.28
2/1	15.47	5.80	2.67	13.97	5.21	2.68	12.45	4.61	2.70	10.98	4.06	2.71
7/6	16.43	5.13	3.21	14.79	4.59	3.22	13.14	4.06	3.23	11.60	3.59	3.23
15/12	17.06	4.68	3.65	15.27	4.14	3.69	13.63	3.71	3.68	11.98	3.27	3.66
20/15	17.25	4.46	3.87	15.47	3.96	3.91	13.75	3.51	3.91	12.06	3.08	3.92
25/18	17.41	4.10	4.25	15.54	3.60	4.32	13.78	3.17	4.34	12.13	2.78	4.36
35/24	17.64	3.78	4.67	15.77	3.32	4.74	13.94	2.93	4.76	12.26	2.56	4.79
OAT	Load											
	60%			50%			40%			30%		
	HC	PI	COP	HC	PI	COP	HC	PI	COP	HC	PI	COP
-25/-	6.32	5.07	1.25	5.36	4.29	1.25	4.28	3.58	1.20	3.21	2.74	1.17
-20/-	7.51	4.91	1.53	6.36	4.22	1.51	5.19	3.46	1.50	3.91	2.65	1.48
-15/-	8.49	4.79	1.77	7.21	4.06	1.77	5.81	3.34	1.74	4.43	2.58	1.72
-10/-	8.49	4.40	1.93	7.26	3.76	1.93	5.79	3.05	1.90	4.49	2.41	1.86
-7/-8	8.54	3.73	2.29	7.31	3.17	2.30	5.85	2.64	2.21	4.57	2.07	2.21
2/1	9.42	3.48	2.71	7.89	2.93	2.69	6.40	2.44	2.62	5.03	1.91	2.63
7/6	9.96	3.08	3.24	8.33	2.59	3.22	6.67	1.90	3.52	5.34	1.44	3.72
15/12	10.24	2.78	3.68	8.63	2.36	3.65	6.88	1.92	3.59	5.37	1.51	3.57
20/15	10.33	2.63	3.93	8.71	2.23	3.91	6.98	1.81	3.87	5.35	1.43	3.73
25/18	10.36	2.38	4.36	8.88	2.04	4.34	7.05	1.65	4.28	5.52	1.32	4.17
35/24	10.41	2.17	4.79	9.17	1.87	4.91	7.13	1.51	4.72	5.49	1.22	4.51
OAT	Load											
	20%			10%			-			-		
	HC	PI	COP	HC	PI	COP	-			-		
-25/-	2.26	1.94	1.16	1.58	1.41	1.12	-	-	-	-	-	-
-20/-	2.71	1.91	1.42	1.88	1.38	1.36	-	-	-	-	-	-
-15/-	3.08	1.85	1.67	2.09	1.33	1.57	-	-	-	-	-	-
-10/-	3.11	1.71	1.82	2.14	1.22	1.75	-	-	-	-	-	-
-7/-8	3.15	1.43	2.19	2.16	1.05	2.06	-	-	-	-	-	-
2/1	3.50	1.33	2.62	2.32	0.96	2.43	-	-	-	-	-	-
7/6	3.70	1.20	3.07	2.55	0.84	3.03	-	-	-	-	-	-
15/12	3.87	1.08	3.58	2.58	0.77	3.34	-	-	-	-	-	-
20/15	3.76	1.03	3.67	2.62	0.73	3.61	-	-	-	-	-	-
25/18	3.74	0.94	3.99	2.59	0.65	4.01	-	-	-	-	-	-
35/24	3.79	0.86	4.42	2.61	0.60	4.35	-	-	-	-	-	-

OAT: Outdoor ambient temperature
HC: Heating capacity
PI: Power input

Part load heat capacity table with at LWT=55℃ (Peak)

OAT	Load											
	100%			90%			80%			70%		
	HC	PI	COP	HC	PI	COP	HC	PI	COP	HC	PI	COP
-25/-	-	-	-	-	-	-	-	-	-	-	-	-
-20/-	10.56	9.20	1.15	9.50	8.30	1.14	8.62	7.37	1.17	7.54	6.46	1.17
-15/-	11.85	8.86	1.34	10.69	7.97	1.34	9.64	7.12	1.35	8.47	6.23	1.36
-10/-	12.16	7.90	1.54	11.00	7.15	1.54	9.84	6.34	1.55	8.54	5.55	1.54
-7/-8	12.19	6.61	1.85	11.00	5.95	1.85	9.85	5.30	1.86	8.64	4.64	1.86
2/1	14.09	6.41	2.20	12.72	5.76	2.21	11.34	5.10	2.22	10.00	4.49	2.23
7/6	14.34	5.57	2.57	12.91	4.99	2.59	11.47	4.42	2.60	10.13	3.91	2.59
15/12	15.29	5.37	2.84	13.68	4.76	2.88	12.21	4.26	2.87	10.73	3.76	2.86
20/15	15.92	5.23	3.04	14.28	4.64	3.08	12.69	4.12	3.08	11.13	3.61	3.08
25/18	16.50	4.74	3.49	14.74	4.16	3.54	13.07	3.67	3.56	11.50	3.22	3.58
35/24	16.83	4.37	3.85	15.05	3.85	3.91	13.30	3.39	3.92	11.70	2.97	3.94
OAT	Load											
	60%			50%			40%			30%		
	HC	PI	COP	HC	PI	COP	HC	PI	COP	HC	PI	COP
-25/-	-	-	-	-	-	-	-	-	-	-	-	-
-20/-	6.49	5.52	1.18	5.50	4.74	1.16	4.49	3.89	1.15	3.38	2.97	1.14
-15/-	7.29	5.32	1.37	6.18	4.52	1.37	4.99	3.72	1.34	3.80	2.87	1.32
-10/-	7.39	4.76	1.56	6.32	4.07	1.55	5.05	3.29	1.53	3.92	2.61	1.50
-7/-8	7.41	3.96	1.87	6.34	3.38	1.88	5.07	2.81	1.81	3.96	2.20	1.80
2/1	8.58	3.85	2.23	7.19	3.24	2.22	5.83	2.70	2.16	4.58	2.12	2.16
7/6	8.69	3.34	2.60	7.27	2.81	2.58	5.82	2.34	2.49	4.66	1.89	2.46
15/12	9.17	3.20	2.87	7.73	2.71	2.85	6.16	2.20	2.80	4.81	1.73	2.78
20/15	9.54	3.09	3.09	8.04	2.62	3.07	6.45	2.12	3.04	4.94	1.68	2.94
25/18	9.82	2.75	3.58	8.42	2.36	3.56	6.68	1.90	3.51	5.23	1.53	3.42
35/24	9.93	2.52	3.95	8.75	2.17	4.04	6.80	1.75	3.89	5.24	1.41	3.72
OAT	Load											
	20%			10%			-			-		
	HC	PI	COP	HC	PI	COP	-			-		
-25/-	-	-	-	-	-	-	-	-	-	-	-	-
-20/-	2.34	2.14	1.09	1.63	1.55	1.05	-	-	-	-	-	-
-15/-	2.64	2.06	1.29	1.79	1.48	1.21	-	-	-	-	-	-
-10/-	2.71	1.85	1.47	1.86	1.32	1.41	-	-	-	-	-	-
-7/-8	2.73	1.53	1.79	1.88	1.12	1.68	-	-	-	-	-	-
2/1	3.18	1.48	2.16	2.11	1.06	2.00	-	-	-	-	-	-
7/6	3.23	1.31	2.46	2.22	0.91	2.43	-	-	-	-	-	-
15/12	3.47	1.24	2.80	2.31	0.89	2.60	-	-	-	-	-	-
20/15	3.47	1.20	2.88	2.42	0.85	2.84	-	-	-	-	-	-
25/18	3.55	1.08	3.27	2.46	0.75	3.29	-	-	-	-	-	-
35/24	3.62	0.99	3.64	2.49	0.70	3.58	-	-	-	-	-	-

OAT: Outdoor ambient temperature
HC: Heating capacity
PI: Power input

Cooing

Part load heat capacity table with at LWT=18℃

OAT	Load											
	100%			90%			80%			70%		
	HC	PI	COP	HC	PI	COP	HC	PI	COP	HC	PI	COP
-5/-0	17.73	2.01	8.82	15.98	1.81	8.81	14.45	1.61	8.95	12.70	1.41	9.02
0/-	17.55	2.19	8.00	15.80	1.98	7.97	14.32	1.76	8.14	12.53	1.54	8.13
5/-	17.08	2.70	6.33	15.40	2.43	6.34	13.90	2.17	6.41	12.21	1.90	6.44
10/0	16.63	3.26	5.11	15.03	2.95	5.10	13.45	2.61	5.15	11.68	2.29	5.10
15/5	16.09	3.66	4.39	14.52	3.30	4.40	13.00	2.94	4.42	11.41	2.58	4.43
20/10	15.87	3.75	4.23	14.33	3.37	4.25	12.77	2.98	4.28	11.27	2.63	4.29
25/15	15.71	3.95	3.98	14.14	3.53	4.00	12.57	3.13	4.01	11.09	2.77	4.01
30/20	15.54	4.09	3.80	13.91	3.62	3.84	12.42	3.24	3.83	10.91	2.86	3.82
35/24	15.37	4.28	3.59	13.79	3.79	3.63	12.25	3.37	3.63	10.74	2.95	3.64
40/28	14.72	4.34	3.40	13.15	3.81	3.45	11.66	3.36	3.47	10.26	2.94	3.49
45/30	13.17	4.57	2.88	11.77	4.02	2.93	10.40	3.54	2.94	9.15	3.10	2.95
50/33	11.75	4.92	2.39	10.50	4.33	2.43	9.28	3.81	2.43	8.16	3.33	2.45
OAT	Load											
	60%			50%			40%			30%		
	HC	PI	COP	HC	PI	COP	HC	PI	COP	HC	PI	COP
-5/-0	10.99	1.21	9.08	9.31	1.03	9.08	7.45	0.85	8.71	5.59	0.65	8.55
0/-	10.80	1.32	8.20	9.15	1.13	8.09	7.46	0.93	8.04	5.62	0.71	7.93
5/-	10.50	1.62	6.47	8.91	1.38	6.48	7.19	1.13	6.34	5.48	0.87	6.27
10/0	10.11	1.96	5.16	8.65	1.68	5.16	6.90	1.36	5.08	5.36	1.07	4.98
15/5	9.78	2.20	4.45	8.37	1.87	4.47	6.69	1.56	4.30	5.23	1.22	4.29
20/10	9.66	2.25	4.29	8.09	1.90	4.27	6.57	1.58	4.16	5.16	1.24	4.16
25/15	9.52	2.37	4.02	7.96	1.99	4.00	6.38	1.66	3.85	5.11	1.34	3.80
30/20	9.32	2.43	3.83	7.86	2.06	3.81	6.26	1.68	3.74	4.89	1.32	3.72
35/24	9.21	2.52	3.65	7.76	2.14	3.63	6.22	1.73	3.59	4.76	1.37	3.47
40/28	8.76	2.51	3.48	7.51	2.16	3.47	5.96	1.74	3.42	4.67	1.40	3.33
45/30	7.77	2.63	2.96	6.85	2.26	3.03	5.32	1.83	2.91	4.09	1.47	2.78
50/33	6.93	2.83	2.45	6.11	2.43	2.51	4.75	1.97	2.41	3.65	1.58	2.31
OAT	Load											
	20%			10%			-			-		
	HC	PI	COP	HC	PI	COP	-			-		
-5/-0	3.94	0.46	8.47	2.75	0.34	8.14	-	-	-	-	-	-
0/-	3.90	0.51	7.62	2.70	0.37	7.29	-	-	-	-	-	-
5/-	3.81	0.63	6.08	2.58	0.45	5.72	-	-	-	-	-	-
10/0	3.71	0.76	4.87	2.54	0.54	4.68	-	-	-	-	-	-
15/5	3.60	0.85	4.26	2.48	0.62	4.00	-	-	-	-	-	-
20/10	3.59	0.86	4.15	2.38	0.62	3.84	-	-	-	-	-	-
25/15	3.53	0.93	3.81	2.43	0.65	3.76	-	-	-	-	-	-
30/20	3.53	0.94	3.74	2.35	0.67	3.48	-	-	-	-	-	-
35/24	3.35	0.98	3.41	2.34	0.70	3.35	-	-	-	-	-	-
40/28	3.17	0.99	3.19	2.19	0.68	3.20	-	-	-	-	-	-
45/30	2.83	1.04	2.73	1.95	0.73	2.68	-	-	-	-	-	-
50/33	2.53	1.12	2.26	1.74	0.78	2.22						

OAT: Outdoor ambient temperature
CC: Cooling capacity
PI: Power input

Part load heat capacity table with at LWT=7℃

OAT	Load											
	100%			90%			80%			70%		
	HC	PI	COP	HC	PI	COP	HC	PI	COP	HC	PI	COP
-5/-0	-	-	-	-	-	-	-	-	-	-	-	-
0/-	-	-	-	-	-	-	-	-	-	-	-	-
5/-	-	-	-	-	-	-	-	-	-	-	-	-
10/0	-	-	-	-	-	-	-	-	-	-	-	-
15/5	15.72	4.86	3.24	14.21	4.40	3.23	12.72	3.90	3.26	11.04	3.41	3.23
20/10	15.56	4.98	3.13	14.04	4.49	3.13	12.57	4.00	3.15	11.03	3.50	3.15
25/15	15.36	5.23	2.93	13.87	4.70	2.95	12.36	4.16	2.97	10.91	3.66	2.98
30/20	15.07	5.39	2.80	13.57	4.82	2.81	12.06	4.27	2.82	10.64	3.78	2.82
35/24	14.84	5.92	2.51	13.28	5.24	2.54	11.86	4.69	2.53	10.42	4.14	2.52
40/28	13.26	6.03	2.20	11.89	5.34	2.23	10.57	4.75	2.23	9.27	4.16	2.23
45/30	11.97	6.15	1.95	10.69	5.40	1.98	9.48	4.77	1.99	8.34	4.18	2.00
50/33	10.56	6.44	1.64	9.44	5.67	1.67	8.34	4.99	1.67	7.34	4.37	1.68
OAT	Load											
	60%			50%			40%			30%		
	HC	PI	COP	HC	PI	COP	HC	PI	COP	HC	PI	COP
-5/-0	-	-	-	-	-	-	-	-	-	-	-	-
0/-	-	-	-	-	-	-	-	-	-	-	-	-
5/-	-	-	-	-	-	-	-	-	-	-	-	-
10/0	-	-	-	-	-	-	-	-	-	-	-	-
15/5	9.56	2.92	3.27	8.17	2.50	3.27	6.52	2.03	3.22	5.06	1.60	3.16
20/10	9.46	2.99	3.17	8.09	2.54	3.18	6.47	2.12	3.06	5.06	1.66	3.05
25/15	9.35	3.14	2.98	7.83	2.64	2.96	6.36	2.20	2.89	4.99	1.73	2.89
30/20	9.13	3.23	2.83	7.64	2.72	2.81	6.12	2.26	2.70	4.90	1.83	2.67
35/24	8.90	3.52	2.53	7.51	2.99	2.51	5.98	2.43	2.47	4.67	1.91	2.45
40/28	7.94	3.56	2.23	6.70	3.01	2.22	5.37	2.44	2.20	4.11	1.93	2.13
45/30	7.12	3.57	2.00	6.10	3.07	1.99	4.85	2.47	1.96	3.79	1.99	1.91
50/33	6.23	3.70	1.68	5.49	3.19	1.72	4.27	2.58	1.66	3.28	2.07	1.58
OAT	Load											
	20%			10%			-			-		
	HC	PI	COP	HC	PI	COP	-			-		
-5/-0	-	-	-	-	-	-	-	-	-	-	-	-
0/-	-	-	-	-	-	-	-	-	-	-	-	-
5/-	-	-	-	-	-	-	-	-	-	-	-	-
10/0	-	-	-	-	-	-	-	-	-	-	-	-
15/5	3.51	1.14	3.08	2.41	0.81	2.97	-	-	-	-	-	-
20/10	3.49	1.15	3.03	2.40	0.84	2.85	-	-	-	-	-	-
25/15	3.47	1.20	2.88	2.30	0.86	2.67	-	-	-	-	-	-
30/20	3.39	1.27	2.68	2.34	0.88	2.64	-	-	-	-	-	-
35/24	3.37	1.37	2.46	2.24	0.98	2.30	-	-	-	-	-	-
40/28	2.89	1.39	2.09	2.02	0.98	2.05	-	-	-	-	-	-
45/30	2.57	1.41	1.83	1.78	0.97	1.84	-	-	-	-	-	-
50/33	2.27	1.46	1.55	1.56	1.02	1.53	-	-	-	-	-	-

OAT: Outdoor ambient temperature
CC: Cooling capacity
PI: Power input

2.5.Operating limits

The operation limits show as below:

Cooling mode:

Ambient temperature range: -5~50°C

Leaving water temperature range: 5~25°C

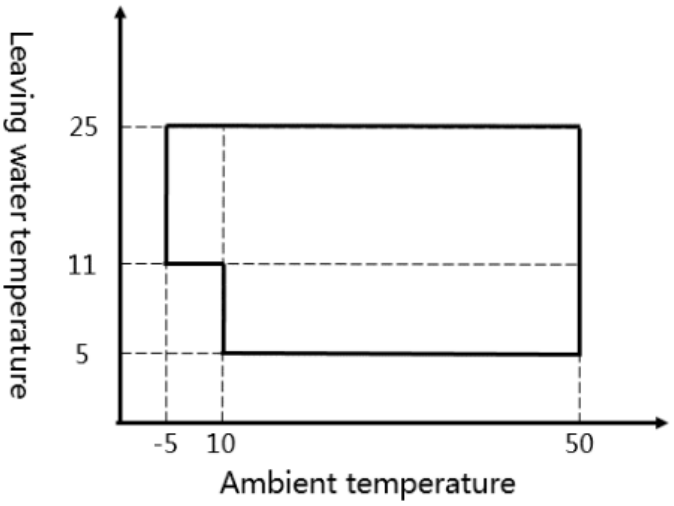

Picture 2-6-1

Heating mode:

Ambient temperature range: -25~43°C

Leaving water temperature range: 25~62°C

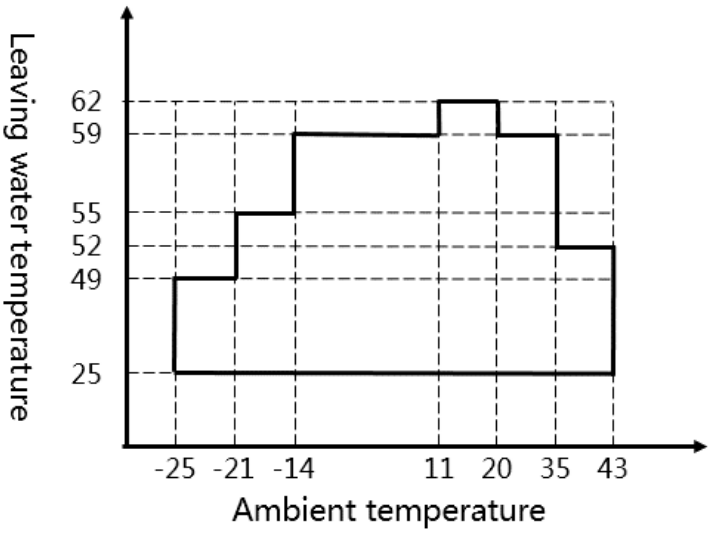

Picture 2-6-2

DHW mode:
Ambient temperature range: -25~43°C
Leaving water temperature range: 40~62°C

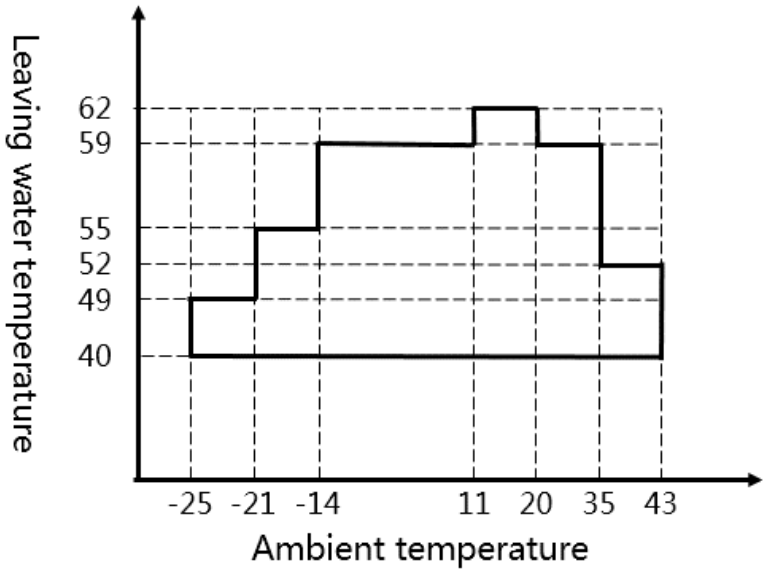

Picture 2-6-3

Note: Above operation limits are only for the heat pump itself, do not include the back-up function.

2.6.Hydronic performance

For the Monobloc heat pump, it standard equips with inv. Water pump inside the hydraulic box, whose performance is as below:

Available static external pressure of 4-10kW:

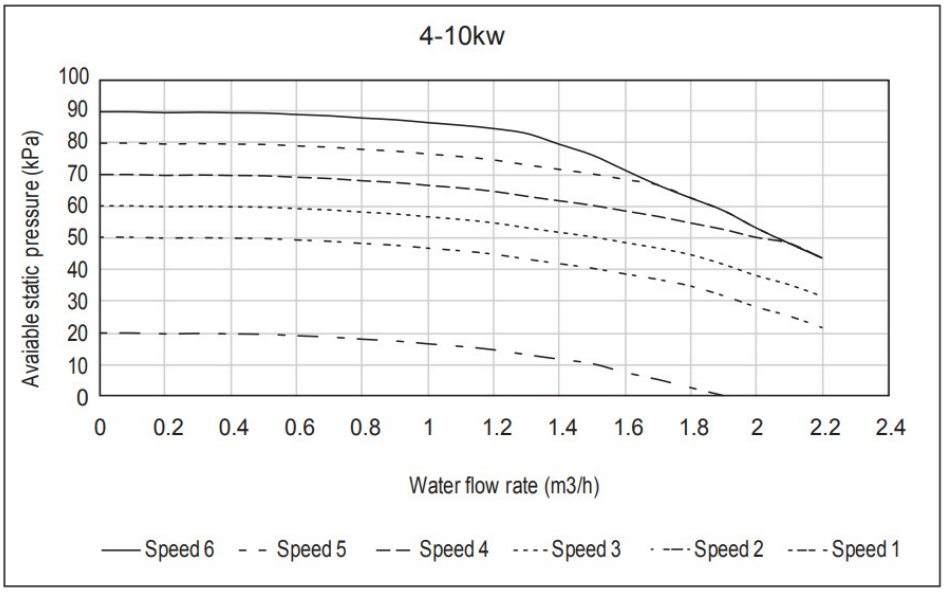

Picture 2-7-1

Available static external pressure of 12-16kW:

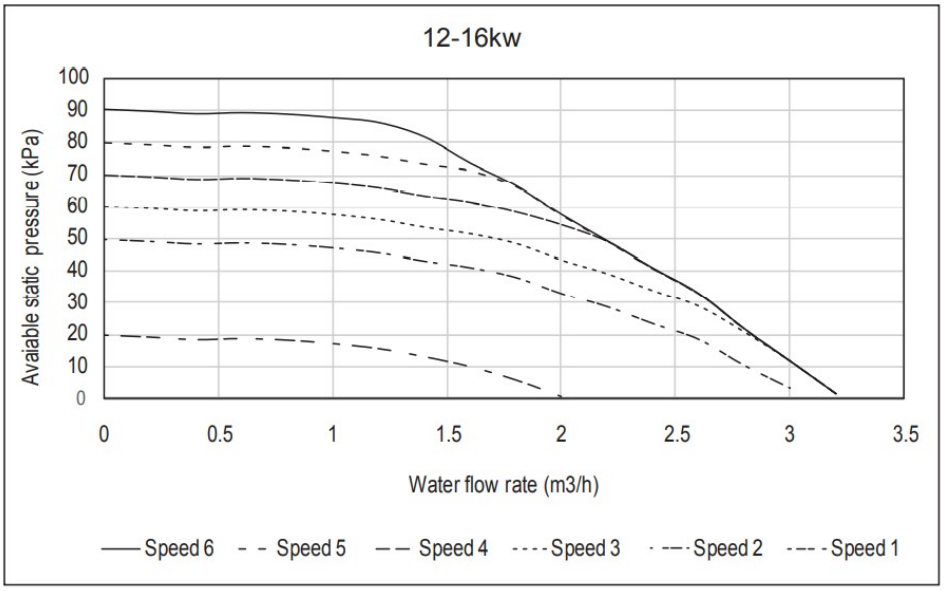

Picture 2-7-2

Pressure drop of 4-10kW:

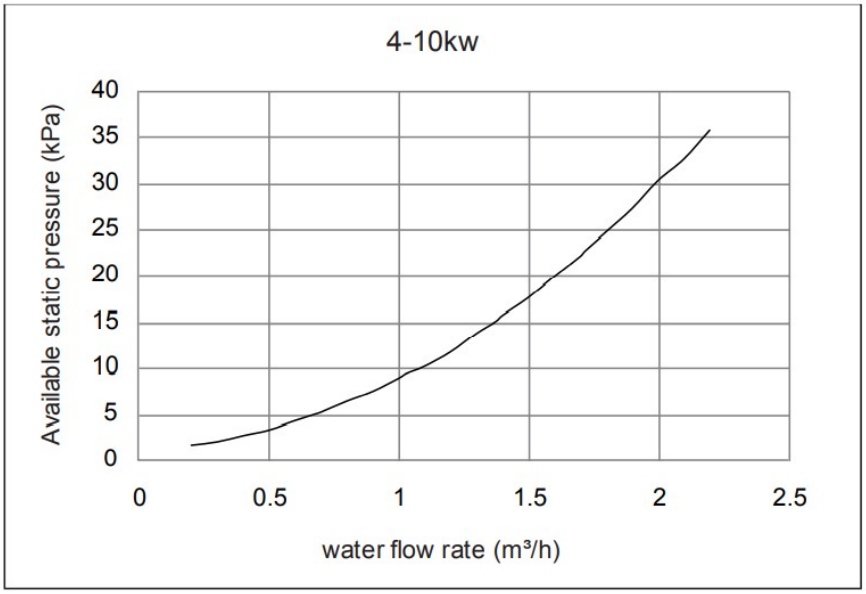

Picture 2-7-3

Pressure drop of 12-16kW:

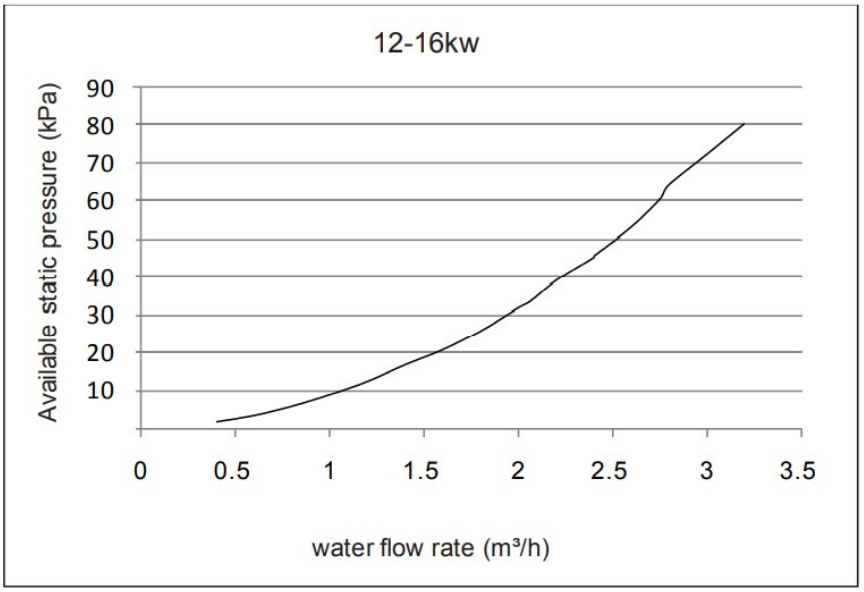

Picture 2-7-4

2.7.Sound level

The noise test under below condition as picture shows, which had been done at semi-anechoic room.

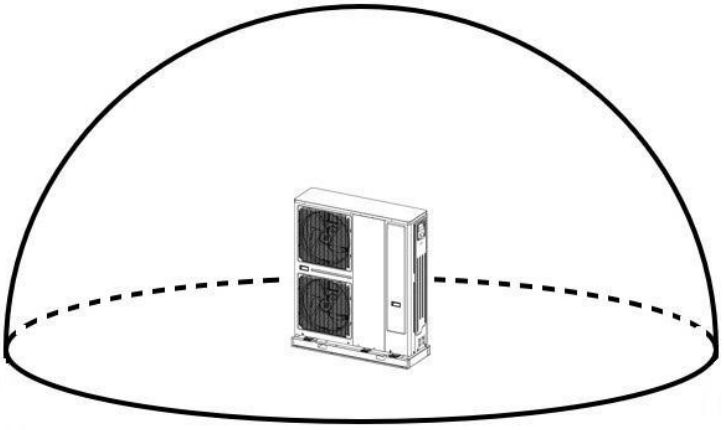

Picture 2-8-1

The test locations of the microphones are located as below:

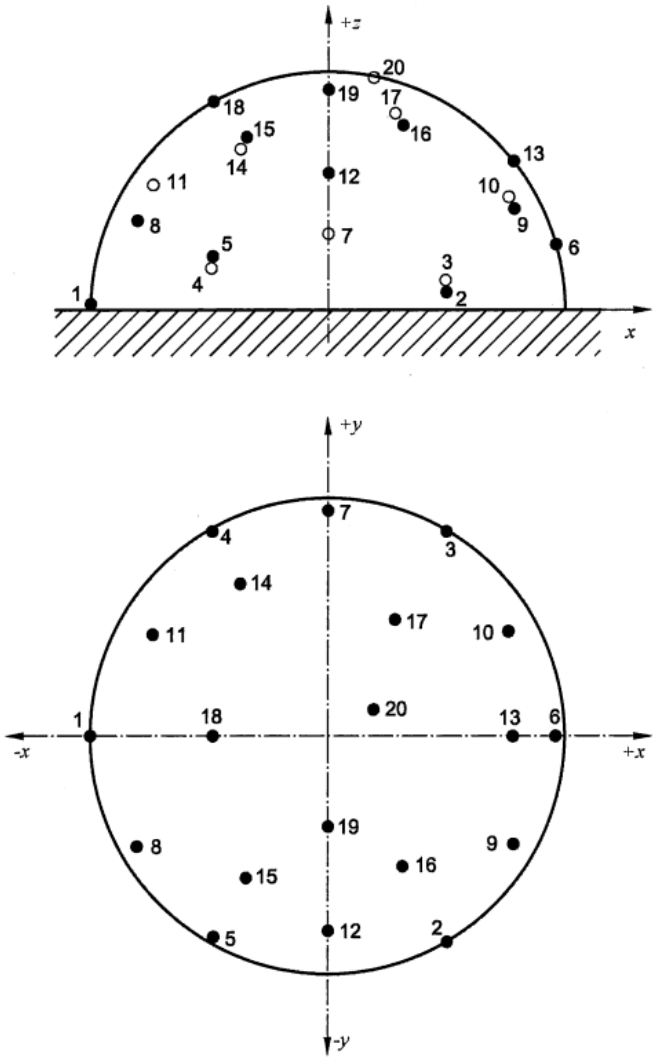

Picture 2-8-2

The tested result of noise for each model are as below table:

Table 2-8-1

Capacity (kW)	Noise value[1] dB(A)	Noise value[2] dB(A)
4kW	61	50
6kW	64	53
8kW	65	54
10kW	66	55
12kW-single phase	69	56
14kW-single phase	69	56
16kW-single phase	70	58
12kW-three phase	69	56
14kW-three phase	69	56
16kW-three phase	70	58

Note:

1. Declared number noise emission values in accordance with ISO 4871 (with an associated uncertainty of +/-2dB(A)). Measured in accordance with ISO 9614-1. The test condition: outdoor ambient temperature is 7℃, leaving water temperature is 55℃, full load.

2. Declared number noise emission values in accordance with EN12102-1 (with an associated uncertainty of+/-2dB(A)). For information, calculated from the sound power level Lw(A). The test condition: outdoor ambient temperature is 7℃, leaving water temperature is 35℃, part load.

2.8.Accessory

There are accessories package into the heat pump which are used to install and user guiding. The detail of the accessory is as below:

Name	Shape	Quantity	Description
IOM of the heat pump unit		1	It is used to guide the install and commissioning of the heat pump unit
IOM of the user interface	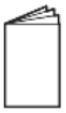	1	It is used to guide the using of the control and heat pump application, as well as guide the install and commissioning of the heat pump unit
User interface		1	It is used to control the heat pump unit and configuration
Connection cable of WUI		1	It is used to connect the WUI to the IDU OCB
Y shape filter		1	It is used to connect to water inlet pipe of the unit for water filtration
Sensors		3	One for DWH tank, one for gas boiler LWT, one for additional OAT
Drainage connector	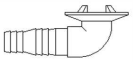	1	It is used to connect to base-pan to water drainage
WUI package box		1	It is used to package the WUI.
Energy label		1	
Wiring diagram		1	It is used to guide the wiring connection while install the unit.
Safety guidance		1	It is safety introduction of R32 refrigerant
String	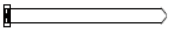	5	It is used to tighten the cables

Note: IOMs are coming with unit or downs load via scan the code.

3. Installation and Field Setting

3.1.Safety

1) Installation (Space)

- Must comply with national gas regulations, state municipal rules and legislation. Notify relevant authorities in accordance with all applicable regulations.
- Must ensure mechanical connections be accessible for maintenance purposes.
- In cases that require mechanical ventilation, ventilation openings shall be kept clear of obstruction.
- When disposal of the product, do follow to the precautions in #12 and comply with national regulations.
- Always contact to local municipal offices for proper handling.

2) Servicing

a. Service personnel

- Any qualified person who is involved with working on or breaking into a refrigerant circuit should hold a current valid certificate from an industry-accredited assessment authority, which authorizes their competence to handle refrigerants safely in accordance with an industry recognized assessment specification.
- Servicing shall only be performed as recommended by the equipment manufacturer. Maintenance and repair requiring the assistance of other skilled personnel shall be carried out under the supervision of the person competent in the use of flammable refrigerants.
- Servicing shall be performed only as recommended by the manufacturer.
- The system is inspected, regularly supervised and maintained by a trained and certified service personnel who is employed by the person user or party responsible.
- Ensure refrigerant charge not to leak.

b. Work

- Prior to beginning work on systems containing flammable refrigerants, safety checks are necessary to ensure that the risk of ignition is minimized.
- For repair to the refrigerating system, the precautions in #2-b to #2-h must be followed before conducting work on the system.
- Work shall be undertaken under a controlled procedure so as to minimize the risk of a flammable gas or vapor being present while the work is being performed.
- All maintenance staff and others working in the local area shall be instructed and supervised on the nature of work being carried out.
- Avoid working in confined spaces. Always ensure away from source, at least 2 meter of safety distance, or zoning of free space area of at least 2 meter in radius.
- Wear appropriate protective equipment, including respiratory protection, as conditions warrant.
- Keep all sources of ignition away.

c. **Checking for presence of refrigerant**

- The area shall be checked with an appropriate refrigerant detector prior to and during work, to ensure the technician is aware of potentially flammable atmospheres.
- Ensure that the leak detection equipment being used is suitable for use with flammable refrigerants, i.e. non sparking, adequately sealed or intrinsically safe.
- In case of leakage/spillage happened, immediately ventilate area and stay upwind and away from spill/release.
- In case of leakage/spillage happened, do notify persons downwind of the leaking/spill, isolate immediate hazard area and keep unauthorized personnel out.

d. Presence of fire extinguisher

- If any hot work is to be conducted on the refrigeration equipment or any associated parts, appropriate fire extinguishing equipment shall be available at hand.
- Have a dry powder or CO2 fire extinguisher adjacent to the charging area.

e. No ignition sources

- No person carrying out work in relation to a refrigeration system which involves exposing any pipe work that contains or has contained flammable refrigerant shall use any sources of ignition in such a manner that it may lead to the risk of fire or explosion.
- He/She must not be smoking when carrying out such work.
- All possible ignition sources, including cigarette smoking, should be kept sufficiently far away from the site of installation, repairing, removing and disposal, during which flammable refrigerant can possibly be released to the surrounding space.
- Prior to work taking place, the area around the equipment is to be surveyed to make sure that there are no

flammable hazards or ignition risks.

f. Ventilated area

- Ensure that the area is in the open or that it is adequately ventilated before breaking into the system or conducting any hot work.
- A degree of ventilation shall continue during the period that the work is carried out.
- The ventilation should safely disperse any released refrigerant and preferably expel it externally into the atmosphere.

g. Checks to the refrigeration equipment

- Where electrical components are being changed, they shall be fit for the purpose and to the correct specification.
- At all times the manufacturer's maintenance and service guidelines shall be followed.
- If in doubt consult the manufacturer's technical department for assistance.
- The following checks shall be applied to installations using flammable refrigerants.

- The ventilation machinery and outlets are operating adequately and are not obstructed.
- Marking to the equipment continues to be visible and legible. Markings and signs that are illegible shall be corrected.

h. Checks to electrical devices

- Repair and maintenance to electrical components shall include initial safety checks and component inspection procedures.
- Initial safety checks shall include but not limit to:-

- That capacitors are discharged: this shall be done in a safe manner to avoid possibility of sparking.
- That there is no live electrical components and wiring are exposed while charging, recovering or purging the system.
- That there is continuity of earth bonding.

- At all times the manufacturer's maintenance and service guidelines shall be followed.
- If in doubt consult the manufacturer's technical department for assistance.
- If a fault exists that could compromise safety, then no electrical supply shall be connected to the circuit until it is satisfactorily dealt with.
- If the fault cannot be corrected immediately but it is necessary to continue operation, an adequate temporary solution shall be used.
- The owner of the equipment must be informed or reported so all parties are advised thereinafter.

3) Repairs to sealed components

- During repairs to sealed components, all electrical supplies shall be disconnected from the equipment being worked upon prior to any removal of sealed covers, etc.
- If it is absolutely necessary to have an electrical supply to equipment during servicing, then a permanently operating form of leak detection shall be located at the most critical point to warn of a potentially hazardous situation.
- Particular attention shall be paid to the following to ensure that by working on electrical components, the casing is not altered in such a way that the level of protection is affected. This shall include damage to cables, excessive number of connections, terminals not made to original specification, damage to seals, incorrect fitting of glands, etc.
- Ensure that apparatus is mounted securely.
- Ensure that seals or sealing materials have not degraded such that they no longer serve the purpose of preventing the ingress of flammable atmospheres.
- Replacement parts shall be in accordance with the manufacturer's specifications.

NOTE: The use of silicon sealant may inhibit the effectiveness of some types of leak detection equipment. Intrinsically safe components do not have to be isolated prior to working on them.

4) Repair to intrinsically safe components

- Do not apply any permanent inductive or capacitance loads to the circuit without ensuring that this will not exceed the permissible voltage and current permitted for the equipment in use.
- Intrinsically safe components are the only types that can be worked on while live in the presence of a flammable atmosphere.
- The test apparatus shall be at the correct rating.
- Replace components only with parts specified by the manufacturer. Unspecified parts by manufacturer may result ignition of refrigerant in the atmosphere from a leak.

5) Cabling

- Check that cabling will not be subject to wear, corrosion, excessive pressure, vibration, sharp edges or any other adverse environmental effects.
- The check shall also take into account the effects of aging or continual vibration from sources such as compressors or fans.

6) Detection of flammable refrigerants

- Under no circumstances shall potential sources of ignition be used in the searching or detection of refrigerant leaks.
- A halide torch (or any other detector using a naked flame) shall not be used.

7) The following leak detection methods are deemed acceptable for all refrigerant systems

- No leaks shall be detected when using detection equipment with a sensitivity of 5 grams per year of refrigerant or better under a pressure of at least 0,25 times the maximum allowable pressure (>1.04MPa, max 4.15MPa). For example, a universal sniffer.
- Electronic leak detectors may be used to detect flammable refrigerants, but the sensitivity may not be adequate, or may need recalibration. (Detection equipment shall be calibrated in a refrigerant-free area.)
- Ensure that the detector is not a potential source of ignition and is suitable for the refrigerant used.
- Leak detection equipment shall be set at a percentage of the LFL of the refrigerant and shall be calibrated to the refrigerant employed and the appropriate percentage of gas (25 % maximum) is confirmed.
- Leak detection fluids are suitable for use with most refrigerants but the use of detergents containing chlorine shall be avoided as the chlorine may react with the refrigerant and corrode the copper pipe-work.
- If a leak is suspected, all naked flames shall be removed/extinguished.
- If a leakage of refrigerant is found which requires brazing, all of the refrigerant shall be recovered from the system, or isolated (by means of shut off valves) in a part of the system remote from the leak. The precautions in #8 must be followed to remove the refrigerant.

8) Removal and evacuation

- When breaking into the refrigerant circuit to make repairs – or for any other purpose – conventional procedures shall be used. However, it is important that best practice is followed since flammability is a consideration.

The following procedure shall be adhered to:

- Remove refrigerant -> purge the circuit with inert gas -> evacuate -> purge again with inert gas
- Open the circuit by cutting or brazing.
- The refrigerant charge shall be recovered into the correct recovery cylinders.
- The system shall be purged with OFN to render the appliances safe. (remark: OFN = oxygen free nitrogen, type of inert gas)
- This process may need to be repeated several times.
- Compressed air or oxygen shall not be used for this task.
- Flushing shall be achieved by breaking the vacuum in the system with OFN and continuing to fill until the working pressure is achieved, then venting to atmosphere, and finally pulling down to a vacuum.
- This process shall be repeated until no refrigerant is within the system.
- When the final OFN charge is used, the system shall be vented down to atmospheric pressure to enable work to take place.
- This operation is absolutely vital if brazing operations on the pipe work are to take place.
- Ensure that the outlet for the vacuum pump is not close to any ignition sources and there is ventilation available.

9) Charging procedures

- In addition to conventional charging procedures, the following requirements shall be followed

- Ensure that contamination of different refrigerants does not occur when using charging equipment.
- Hoses or lines shall be as short as possible to minimize the amount of refrigerant contained in them.
- Cylinders shall be kept in an appropriate position according to the instructions.
- Ensure that the refrigeration system is earthed prior to charging the system with refrigerant.
- Label the system when charging is complete (if not already).
- Extreme care shall be taken not to over fill the refrigeration system.

- Prior to recharging the system it shall be pressure tested with OFN (refer to #7).
- The system shall be leak tested on completion of charging but prior to commissioning.
- A follow up leak test shall be carried out prior to leaving the site.

- Electrostatic charge may accumulate and create a hazardous condition when charging and discharging the refrigerant. To avoid fire or explosion, dissipate static electricity during transfer by grounding and bonding containers and equipment before charging/discharging.

10) Decommissioning

- Before carrying out this procedure, it is essential that the technician is completely familiar with the equipment and all its details.
- It is recommended good practice that all refrigerants are recovered safely.
- Prior to the task being carried out, an oil and refrigerant sample shall be taken in case analysis is required prior to re-use of reclaimed refrigerant.
- It is essential that electrical power is available before the task is commenced.

a) Become familiar with the equipment and its operation.
b) Isolate system electrically.
c) Before attempting the procedure ensure that:

• mechanical handling equipment is available, if required, for handling refrigerant cylinders;
• all personal protective equipment is available and being used correctly;
• the recovery process is supervised at all times by a competent person;
• recovery equipment and cylinders conform to the appropriate standards.

d) Pump down refrigerant system, if possible.
e) If a vacuum is not possible, make a manifold so that refrigerant can be removed from various parts of the system.
f) Make sure that cylinder is situated on the scales before recovery takes place.
g) Start the recovery machine and operate in accordance with manufacturer's instructions.
h) Do not over fill cylinders. (No more than 80 % volume liquid charge).
i) Do not exceed the maximum working pressure of the cylinder, even temporarily.
j) When the cylinders have been filled correctly and the process completed, make sure that the cylinders and the equipment are removed from site promptly and all isolation valves on the equipment are closed off.
k) Recovered refrigerant shall not be charged into another refrigeration system unless it has been cleaned and checked.

• Electrostatic charge may accumulate and create a hazardous condition when charging or discharging the refrigerant. To avoid fire or explosion, dissipate static electricity during transfer by grounding and bonding containers and equipment before charging/discharging.

11) Labelling

- Equipment shall be labelled stating that it has been de-commissioned and emptied of refrigerant.
- The label shall be dated and signed.
- Ensure that there are labels on the equipment stating the equipment contains flammable refrigerant.

12) Recovery

- When removing refrigerant from a system, either for servicing or decommissioning, it is recommended good practice that all refrigerants are removed safely.
- When transferring refrigerant into cylinders, ensure that only appropriate refrigerant recovery cylinders are employed.
- Ensure that the correct number of cylinders for holding the total system charge are available.
- All cylinders to be used are designated for the recovered refrigerant and labelled for that refrigerant (i.e. special cylinders for the recovery of refrigerant).
- Cylinders shall be complete with pressure relief valve and associated shut-off valves in good working order.
- Recovery cylinders are evacuated and, if possible, cooled before recovery occurs.
- The recovery equipment shall be in good working order with a set of instructions concerning the equipment that is at hand and shall be suitable for the recovery of flammable refrigerants.
- In addition, a set of calibrated weighing scales shall be available and in good working order.
- Hoses shall be complete with leak-free disconnect couplings and in good condition.
- Before using the recovery machine, check that it is in satisfactory working order, has been properly maintained and that any associated electrical components are sealed to prevent ignition in the event of a refrigerant release. Consult manufacturer if in doubt.
- The recovered refrigerant shall be returned to the refrigerant supplier in the correct recovery cylinder, and the relevant Waste Transfer Note arranged.
- Do not mix refrigerants in recovery units and especially not in cylinders.

- If compressors or compressor oils are to be removed, ensure that they have been evacuated to an acceptable level to make certain that flammable refrigerant does not remain within the lubricant.
- The evacuation process shall be carried out prior to returning the compressor to the suppliers.
- Only electric heating to the compressor body shall be employed to accelerate this process.
- When oil is drained from a system, it shall be carried out safely.

3.2.Installation

a. Installation procedure

b. Hoisting and moving

- While moving the unit, please use the forklift to move through the pallet without unpackage.
- Hoisting the unit should be followed the below picture with certain angle to avoid slant.

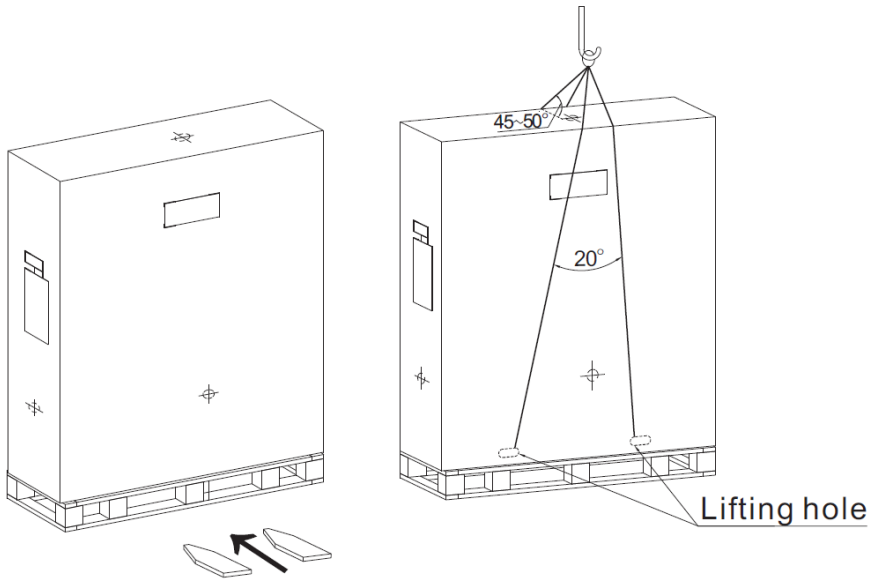

Picture 3-2-1

c. Installation basement and location

- A solid base prevents excess vibration and noise. Outdoor unit bases should be constructed on solid ground or on structures of sufficient strength to support the unit's weight.
- Bases should be at least 100mm high to provide sufficient drainage and to prevent water ingress into the base of the unit.
- Either steel or concrete bases may be suitable.
- Outdoor units should not be installed on supporting structures that could be damaged by water build-in in the event of a blocked drain.
- Fix the unit securely to foundation by means of the Φ8-12 expansion bolt. It is best to screw in the foundation bolts until their length is 20 mm from the foundation surface.

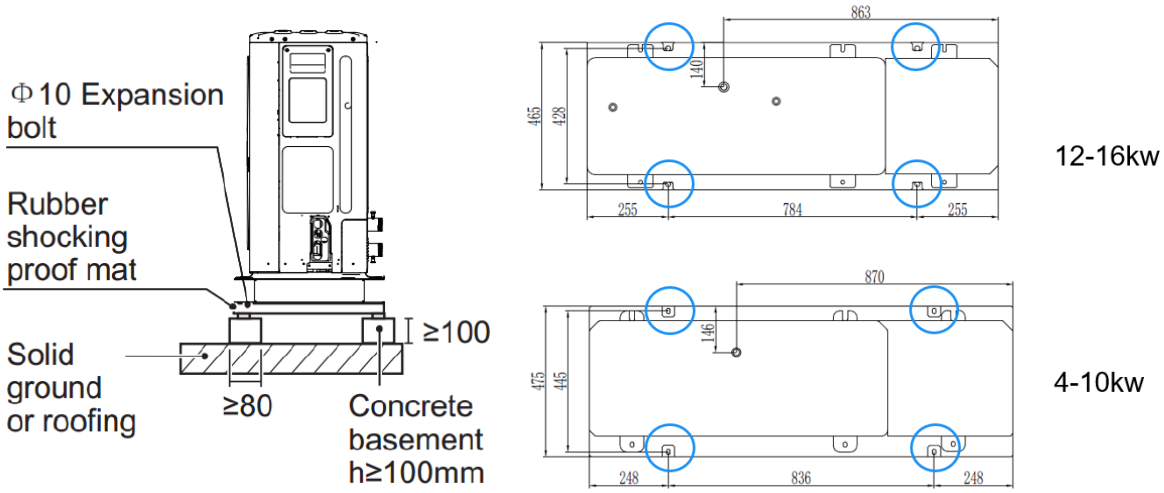

Picture 3-2-2

d. Installation location

Placement of the outdoor unit should take account of the following considerations:

- Outdoor units should not be exposed to direct radiation from a high-temperature heat source.
- Outdoor units should not be installed in positions where dust or dirt may affect heat exchangers.
- Outdoor units should not be installed in locations where exposure to oil or to corrosive or harmful gases, such as acidic or alkaline gases, may occur.
- Outdoor units should not be installed in locations where exposure to salinity may occur.
- Outdoor units should be installed in well-drained, well-ventilated positions.
- Outdoor units should be installed in positions that are as close as possible to the heat emitters.

- Outdoor units should be installed in positions that are sufficiently close to the desired position of the wired controller that the controller's wiring length limitation will not be exceeded.
- In systems that are configured to heat domestic hot water and/or include an external backup electric heater, outdoor units should be installed in positions that are sufficiently close to the domestic hot water tank and/or backup electric heater that the temperature sensor wiring length limitations will not be exceeded.
- Outdoor units should be installed in locations where the noise from the unit will not disturb neighbors.

i. Location with strong wind

Wind of 5m/s or more blowing against an outdoor unit's air outlet blocks the flow of air through the unit, leading to deterioration in unit capacity, accelerated frost accumulation when in heating mode or domestic hot water mode, and potential disruption to operation due to increased pressure in the refrigerant circuit. Exposure to very strong wind can also cause the fan to rotate excessively fast, potentially leading to damage to the fan.

In order to avoid the affect of strong wind, please try to avoid the unit installation facing to strong wind as below picture.

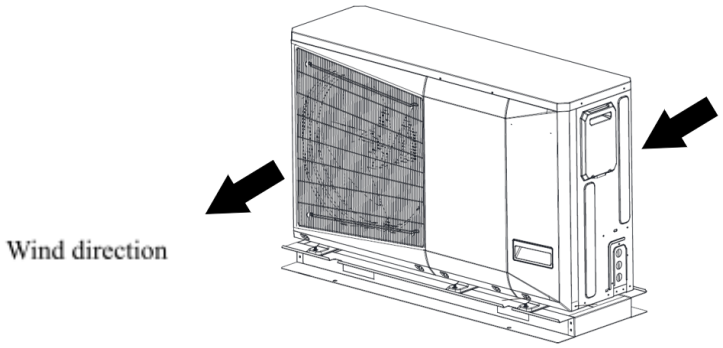

Picture 3-2-3

ii. Loca old area

In cold climate ation should take account of the following considerations:

- Never ins te where the suction side may be exposed directly to wind.
- To prevent exposure to wind, install a baffle plate on the air discharge side of the unit.
- To prevent exposure to wind, install the unit with its suction side facing the wall.
- In areas of heavy snowfall, a canopy should be installed to prevent snow entering the unit. Additionally, the height of the base structure should be increased so as to raise the unit further off the ground.

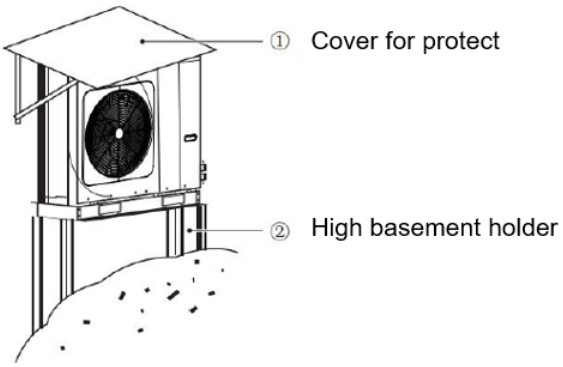

Picture 3-2-4

e. Service space

- Outdoor units must be spaced such that sufficient air may flow through each unit. Sufficient airflow across heat exchangers is essential for outdoor units to function properly.
- Outdoor units should be installed with enough space to service

While single module installation

- Facing a wall

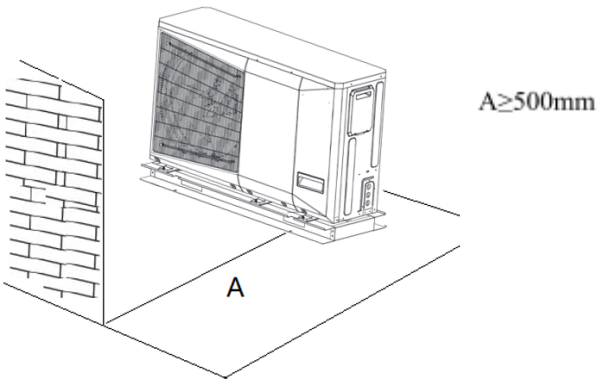

Picture 3-2-5

- Back to a wall

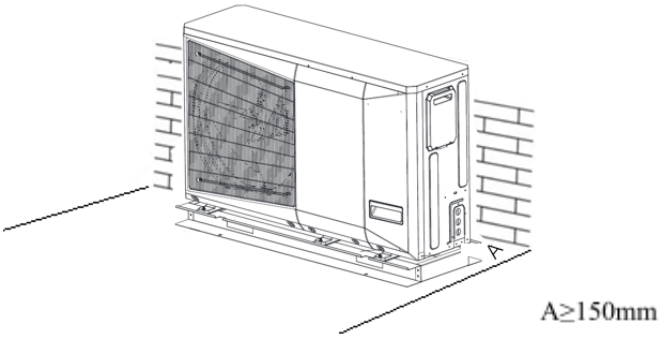

Picture 3-2-6

While multi modules installation

- Facing a wall

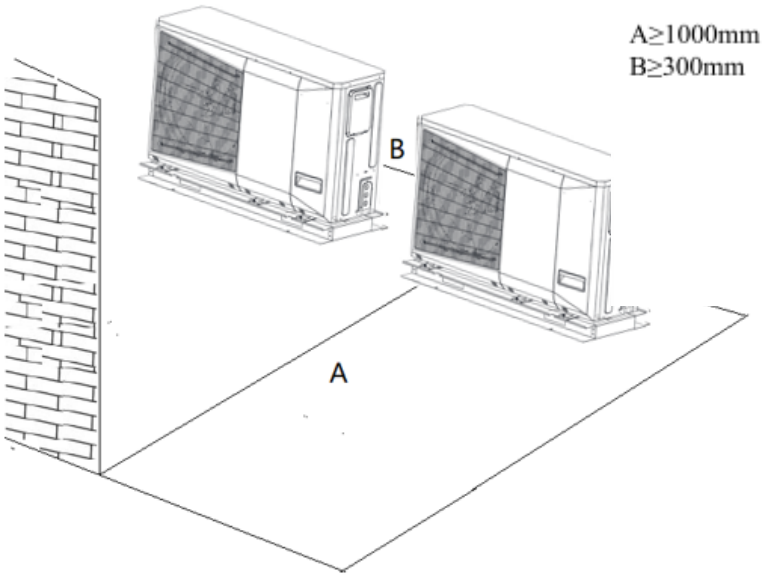

Picture 3-2-7

- Back to a wall

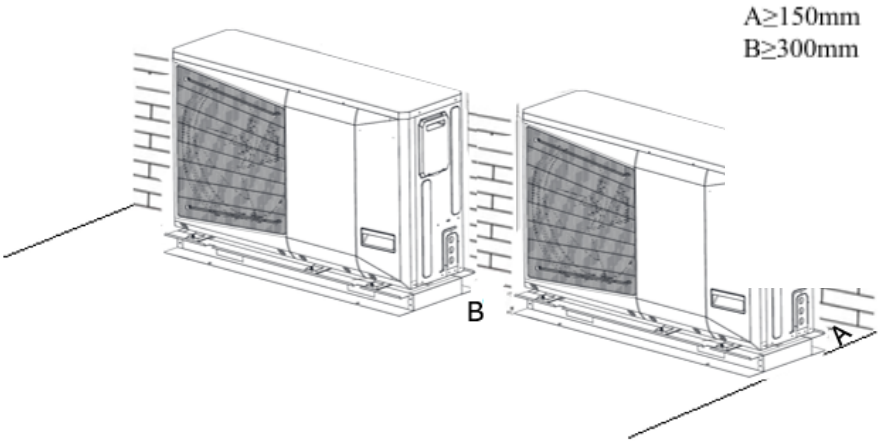

Picture 3-2-8

3.3.Water pipework

a. Water circuit check

Mono heat pump units are equipped with a water inlet and outlet for connection to a water circuit. Mono heat pump units should be connected to closed water circuits. Connection to an open water circuit would lead to excessive corrosion of the water piping. Only materials complying with all applicable legislation should be used.

Before continuing installation of the unit, check the following:

- The maximum water pressure ≤ 3 bar.
- The maximum water temperature ≤ 70°C according to safety device setting.
- Always use materials that are compatible with the water used in the system and with the materials used in the unit.
- Ensure that components installed in the field piping can withstand the water pressure and temperature.

Drain taps must be provided at all low points of the system to permit complete drainage of the circuit during
maintenance.

- Air vents must be provided at all high points of the system. The vents should be located at points that are easily accessible for service. An automatic air purge is provided inside the unit. Check that this air purge valve is not tightened so that automatic release of air in the water circuit is possible.

b. Water volume and expansion vessel

In order to have a better performance and safety running, it requests the water flow volume and correct water flow rate.

- **Min water flow volume**

  The minimum water loop volume, in litres, is given by the following formula:

  Volume (l) = CAP (kW) x N

  Where CAP is the nominal cooling capacity at nominal operating conditions.

Application	N
Air conditioning	3,5
Heating or domestic hot water application	6
Industrial process cooling	See note below

NOTE:

For industrial process cooling applications, where high stability of water temperature levels must be achieved, the values above must be increased. We recommend consulting the factory for these particular applications.

- **Max. water flow volume**

Units with hydraulic module incorporate an expansion tank (5L) that limits the water loop volume. The table below gives the maximum loop volume for pure water or ethylene glycol with various concentrations.

If the total system volume is higher than the values given above, the installer must add another expansion tank, suitable for the additional volume.

Water maximum volume (L) (4-16kW)		
Static pressure (bar)	1,5	3
Fresh water	200	50
Ethylen glycol 10%	150	38
Ethylen glycol 20%	110	28
Ethylen glycol 30%	90	23
Ethylen glycol 40%	76	19

- **Water flow rate**

In order to having the best performance, please follow the nominal water flow rate value.

Units with hydraulic module			
Model	Minimum water flow rate(m3/h)	Nominal water flow rate (1)(m3/h)	Maximum water flow rate(m3/h)
4kw	0.4	0.69	4.9
6kw	0.4	1.03	4.9
8kw	0.4	1.38	4.9
10kw	0.4	1.72	4.9
12kw	0.75	2.06	7.2
14kw	0.75	2.41	7.2
16kw	0.75	2.76	7.2

- **Expansion tank**

The expansion tank is used to balance the water pressure of the system.

For Monobloc, it standard equips with one expansion tank 5L, pre-charged pressure is 1.5bar.

The volume of expansion tank:

$$V=C * e / (1 - P1/P2)$$

V: Expansion tank volume;
C: Total volume of water;
e: Expansion ratio of water;
P1: Pre-charged pressure pf expansion tank, absolute pressure;
P2: Max. water pressure of water system, absolute pressure;

Expansion ratio			
Temp. (℃)	Temp. (℃)	Temp. (℃)	Temp. (℃)
0	0	0	0
4	4	4	4
10	10	10	10
20	20	20	20
30	30	30	30
40	40	40	40
45	45	45	45
50	50	50	50
55	55	55	55

c. Water circuit connection

Water connections must be made correctly in accordance with the labels on the outdoor unit, with respect to the water inlet and water outlet. If air, moisture or dust gets in the water circuit, problems may occur. Therefore, always take into account the following when connecting the water circuit:

- Use clean pipes only.
- Hold the pipe end downwards when removing burrs
- Cover the pipe end when inserting it through a wall to prevent dust and dirt entering.
- Use a good thread sealant for sealing the connections. The sealing must be able to withstand the pressures and temperatures of the system.
- When using non-copper metallic piping, be sure to insulate the two kinds of materials from each other to prevent galvanic corrosion.
- For copper is a soft material, use appropriate tools for connecting the water circuit. Inappropriate tools will cause damage to the pipes

d. Water circuit anti-frozen protection

Ice formation can cause damage to the hydronic system. As the outdoor unit may be exposed to sub-zero temperatures, care must be taken to prevent freezing of the system. All internal hydronic parts are insulated to reduce heat loss. Insulation must also be added to the field piping.

- The software contains special functions using the heat pump to protect the entire system against freezing. When the temperature of the water flow in the system drops to a certain value, the unit will heat the water, either using the heat pump, the electric heating tap, or the backup heater. The freeze protection function will turn off only when the temperature increases to a certain value.
- In event of a power failure, the above features would not protect the unit from freezing.

Since a power failure could happen when the unit is unattended, the supplier recommends use anti-freeze fluid to the water system.

- Depending on the expected lowest outdoor temperature, make sure the water system is filled with a concentration of glycol as mentioned in the table below. When glycol is added to the system, the performance of the unit will be affected. The correction factor of the unit capacity, flow rate and pressure drop of the system is listed in the table.

Table 3-3-1 Ethylene Glycol

Concentration of ethylene glycol (%)	Modification coefficient				Minimum outdoor temperature (℃)
	Cooling capacity modification	Power input modification	Water resistance	Water flow modification	
0	1.000	1.000	1.000	1.000	0
10	0.984	0.998	1.118	1.019	-5
20	0.973	0.995	1.268	1.051	-15
30	0.965	0.992	1.482	1.092	-25

Table 3-3-2 Propylene Glycol

Concentration of ethylene glycol (%)	Modification coefficient				Minimum outdoor temperature (℃)
	Cooling capacity modification	Power input modification	Water resistance	Water flow modification	
0	1.000	1.000	1.000	1.000	0
10	0.976	0.996	1.071	1.000	-4
20	0.961	0.992	1.189	1.016	-12
30	0.948	0.988	1.380	1.034	-20

Uninhibited glycol will turn acidic under the influence of oxygen. This process is accelerated by presence of copper and at higher temperatures. The acidic uninhibited glycol attacks metal surfaces and forms galvanic corrosion cells that cause severe damage to the system. It is of extreme importance:

- That the water treatment is correctly executed by a qualified water specialist.
- That a glycol with corrosion inhibitors is selected to counteract acids formed by the oxidation of glycols.
- That in case of an installation with a domestic hot water tank, only the use of propylene glycol is allowed. In other installations the use of ethylene glycol is fine.
- That no automotive glycol is used because their corrosion inhibitors have a limited lifetime and contain silicates that can foul or plug the system.
- That galvanized piping is not used in glycol systems since it may lead to the precipitation of certain elements in the glycol's corrosion inhibitor.
- To ensure that the glycol is compatible with the materials used in the system.

e. Water circuit clean and air purge

- Water circuit clean
  - Open all the valves of the water circuit
  - Start the external pump which is professional pump for clean water pipe system
  - Read the BPHE pressure drop by taking the difference of the readings of the pressure gauge connected to the unit inlet and outlet.
  - Let the pump run for two consecutive hours to flush the hydraulic circuit of the system (presence of solid contaminants).
  - Take another reading.
  - Compare this value to the initial value.
  - If the pressure drop has decreased, this indicates that the screen filter must be removed and cleaned, as the hydraulic circuit contains solid particles.
  - In this case stop the pump and close the shut-off valves at the water inlet and outlet and remove the screen filter after emptying the hydraulic.
  - Repeat, if necessary, to ensure that the filter is not contaminated.
- Air purge
  - After filling with water, wait about 24h before activating the purge procedure.
  - Open the air vent.

- Activate the purge mode: water pump is requested to run continuously at maximum speed to purge the hydraulic circuit regardless the flow switch value.

f. Water circuit insulation

The complete water circuit including all piping, water piping must be insulated to prevent condensation during cooling operation and reduction of the heating and cooling capacity as well as prevention of freezing of the outside water piping during winter. The insulation material should at least of V0 fire resistance rating and complies with all applicable legislation. The thickness of the sealing materials must be at least 13mm with thermal conductivity 0.039W/mK in order to prevent freezing on the outside water piping. If the outdoor ambient temperature is higher than 30°C and the humidity is higher than RH 80%, the thickness of the sealing materials should be at least 20mm in order to avoid condensation on the surface of the seal.

g. Drainage water pipe

The Monobloc heat pump equips with 2 water drainage pipes as below pictures, one is the hydraulic module to escapes the water due to the high water pressure to protect the hydraulic module; the other one is the base-pan drainage hole which equips with a drainage connector to escapes the defrosting water out of the base-pan.

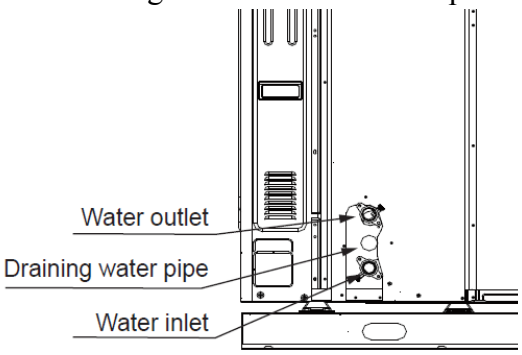

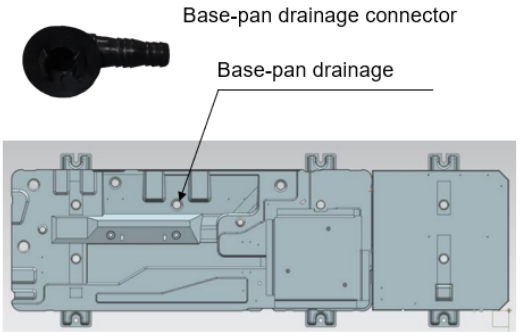

Picture 3-3-1

3.4.Electrical wiring

a. Cautions

- All installation and wiring must be carried out by competent and suitably qualified, certified and accredited professionals and in accordance with all applicable legislation.
- Electrical systems should be grounded in accordance with all applicable legislation.
- Overcurrent circuit breakers and residual-current circuit breakers (ground fault circuit interrupters) should be used in accordance with all applicable legislation.
- Wiring patterns shown in this data book are general connection guides only and are not intended for, or to include all details for, any specific installation.
- The water piping, power wiring and communication wiring are typically run in parallel. However the communication wiring should not be bound together with power wiring. To prevent signal interference, the power wiring and communication wiring should not be run in the same conduit. If the power supply is less than 10A, a separation of at least 300mm between power wiring and communication wiring conduits should be maintained; if the power supply is in the range 10A to 50A then a separation of at least 500mm should be maintained.

b. Precautions

- For the Monobloc heat pump, it has the wiring holes to fix the cables. And it remains multi wiring holes to separate the low voltage cables and high voltage cable.
- Wiring holes (left one is 4-10kw, while the right one is 12-16kw)

Picture 3-4-1

c. Wiring diagram

- 4-10kw single phase

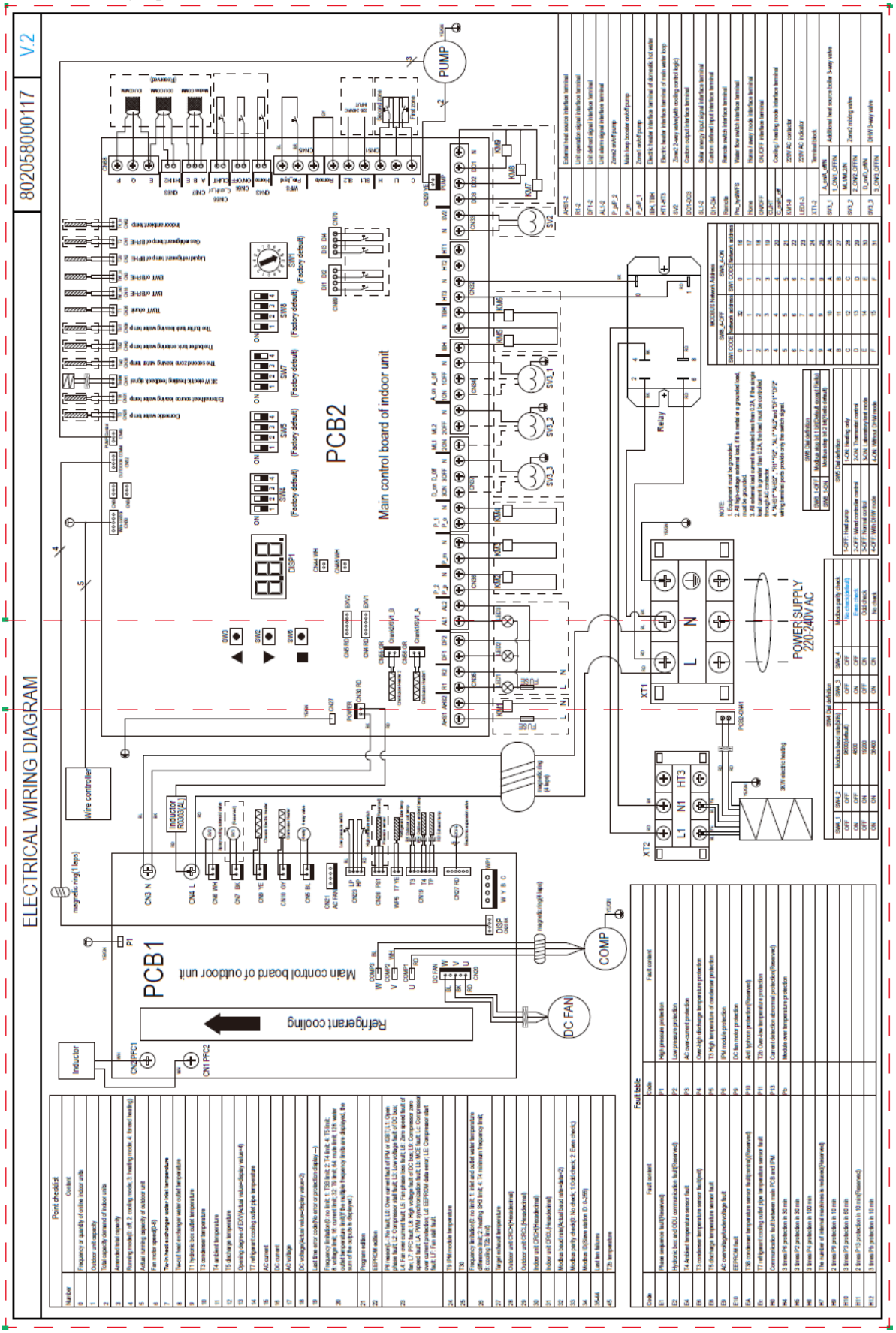

- 12-16kw single phase

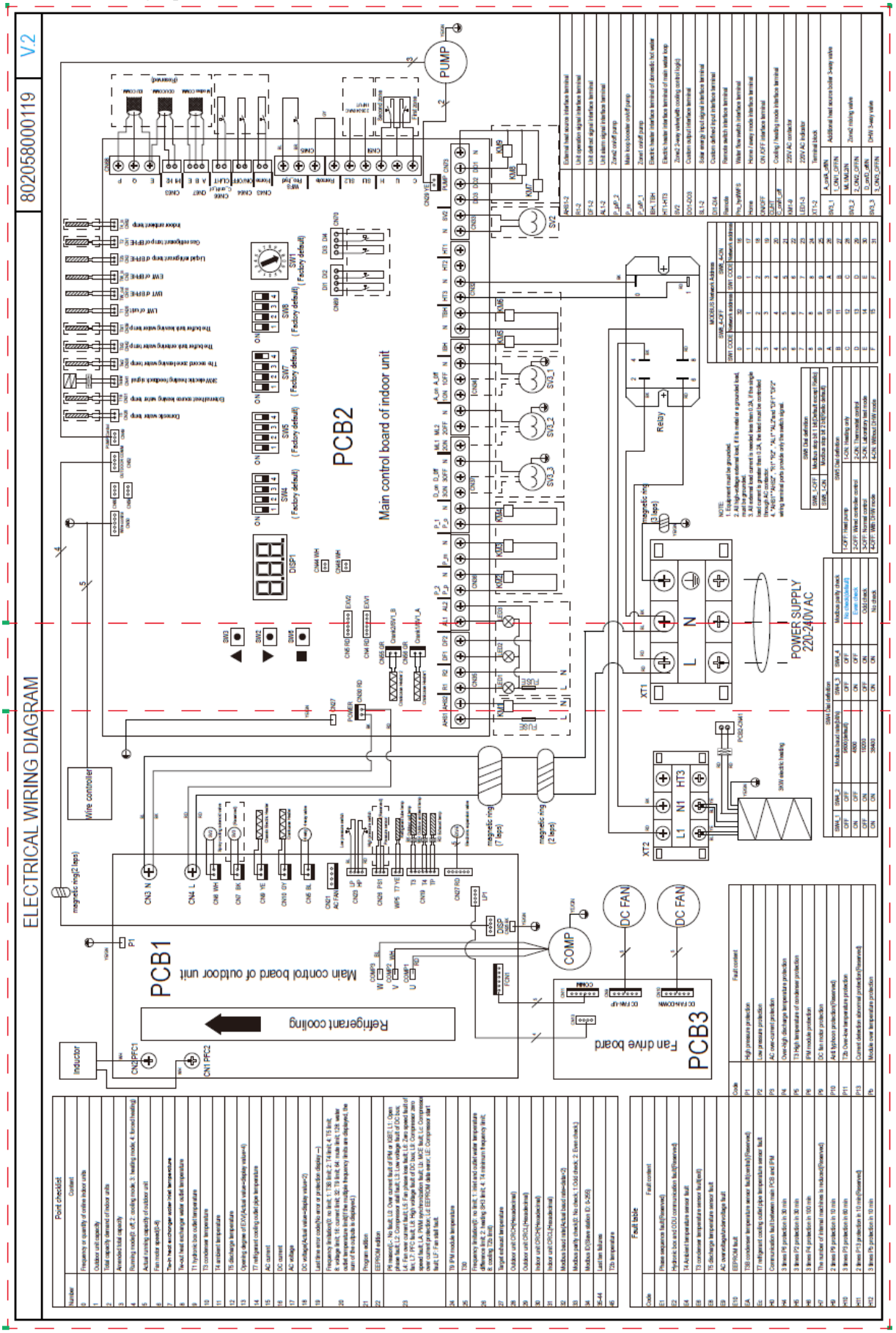

- 12-16kw three-phase

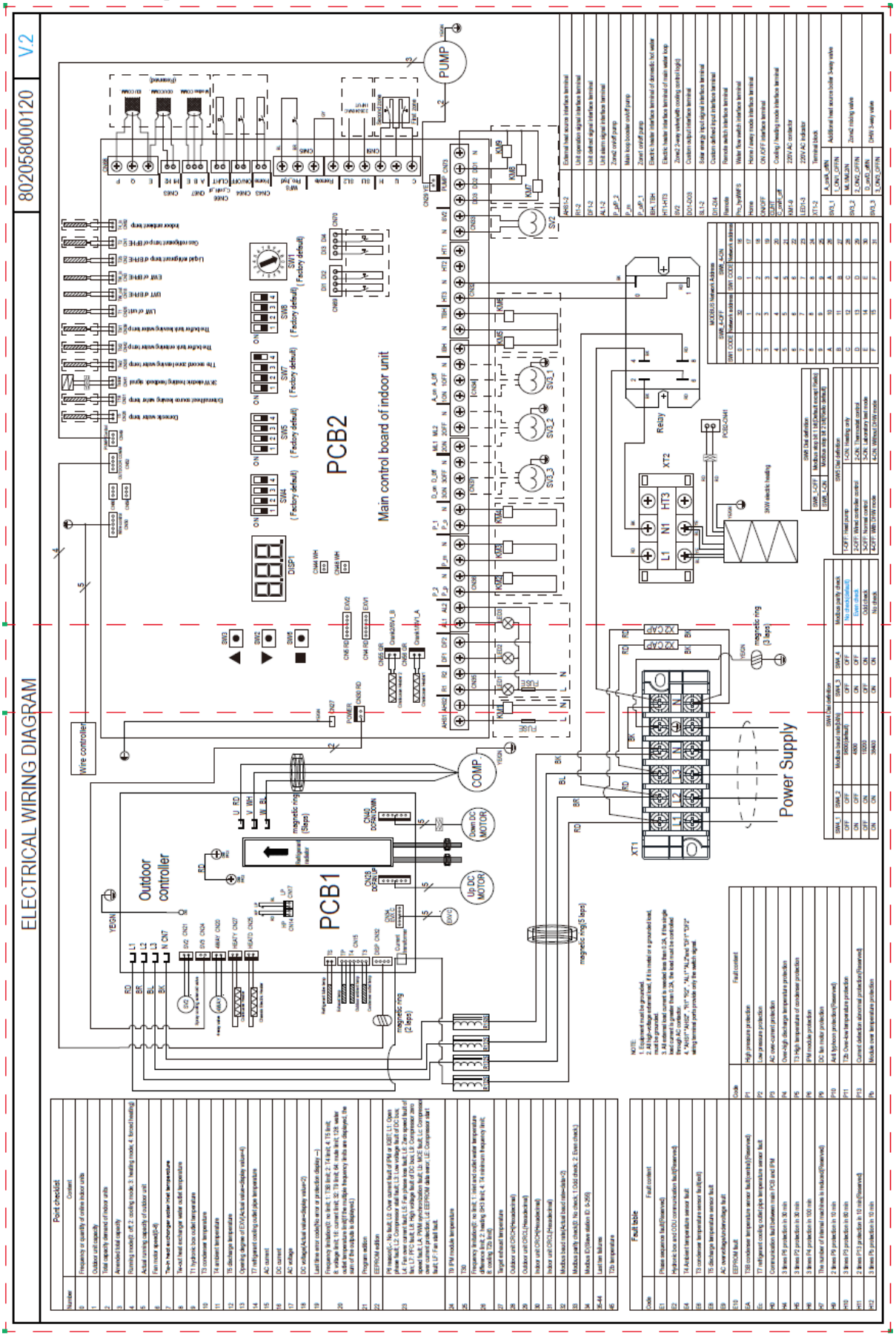

d. Wiring of terminals

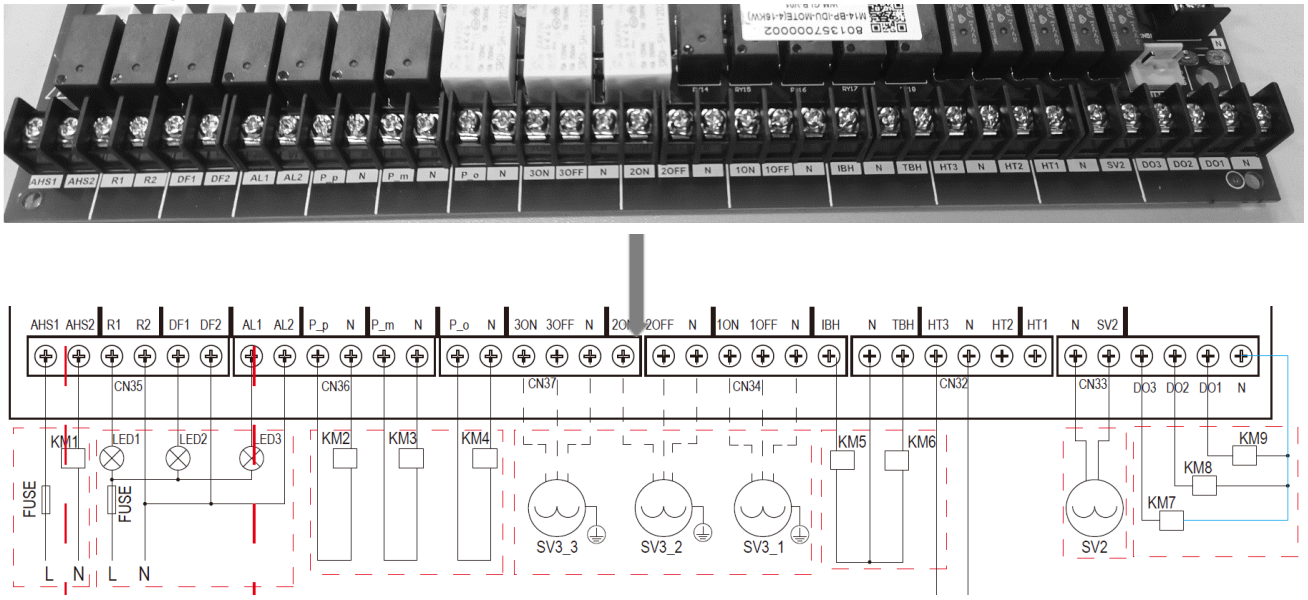

Picture 3-4-2

Table 3-4-1

No.	Name	Function	Voltage
1	AHS1-AHS2	Gas boiler controller signal	Dry contact output
2	R1-R1	Unit is running	Dry contact output
3	DF1-DF2	Unit is defrosting	Dry contact output
4	AL1-AL2	Unit is alarm	Dry contact output
5	P-p-N	Bi-zone pump (reserved)	220V AC output
6	P-m-N	Gas boiler water loop pump	220V AC output
7	P-o-N	Additional main water loop pump	220V AC output
8	3ON-3OFF-N	DHW 3-way valve signal	220V AC output
9	2ON-2OFF-N	Reserved	220V AC output
10	1ON-1OFF-N	Gas boiler valve signal	220V AC output
11	IBH-TBH-N	DHW electrical heater ports	220V AC output
12	TH1-TH2-TH3-N	Main water loop electrical heater ports, TH3-N is standard equip with 3kw in unit	220V AC output
13	SV2-N	FCU water loop valve, to cut off water supply to radiator/space heater coil in cool mode	220V AC output
14	DO1-DO2-DO3-N	Customized output, refer service manual for details	220V AC output

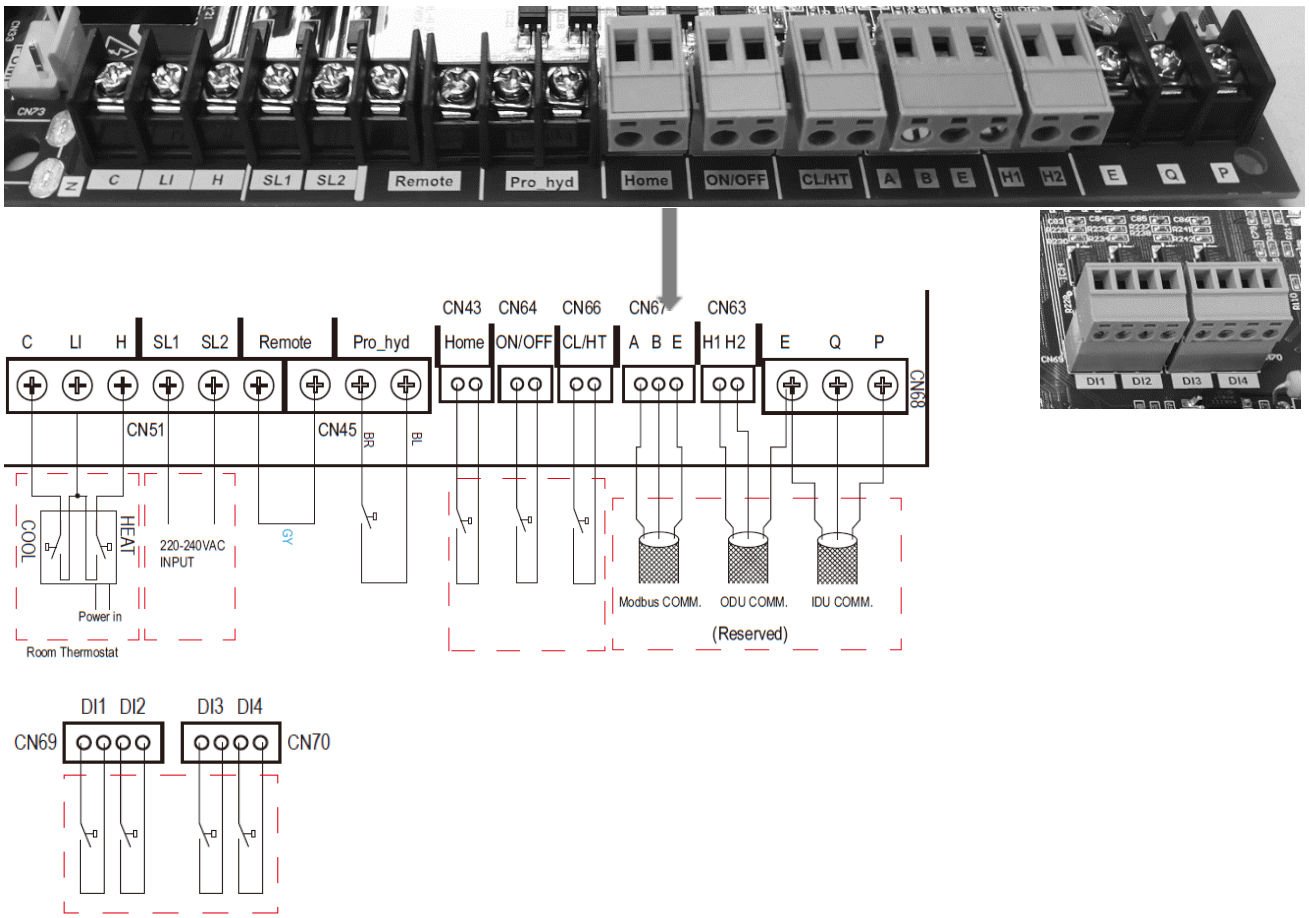

Picture 3-4-2

Table 3-4-2

No.	Name	Function	Voltage
1	C-L1-H	Cooling-heating signal from thermostat	220V high voltage connection thermostat
2	SL1-SL2	Solar heat source system input	220V AC input
3	Remote	Remote control function, open to stop the unit in any case, default as closed	Dry contact input
4	Pro-hyd	Water flow switch port	Dry contact input
5	Home	Occupancy mode select port, home or away	Dry contact input
6	ON/OFF	ON/OFF dry contact port	Dry contact input
7	CL/HT	Cooling or heating mode select port	Dry contact input
8	A-B-E	Modbus communication port	RS485 type
9	H1-H2	Reserved	RS485 type
10	P-Q-E	Reserved	RS485 type
11	DI1-DI4	Customized inputs, refer to service manual for details	Dry contact input

3.5.DIP switch setting

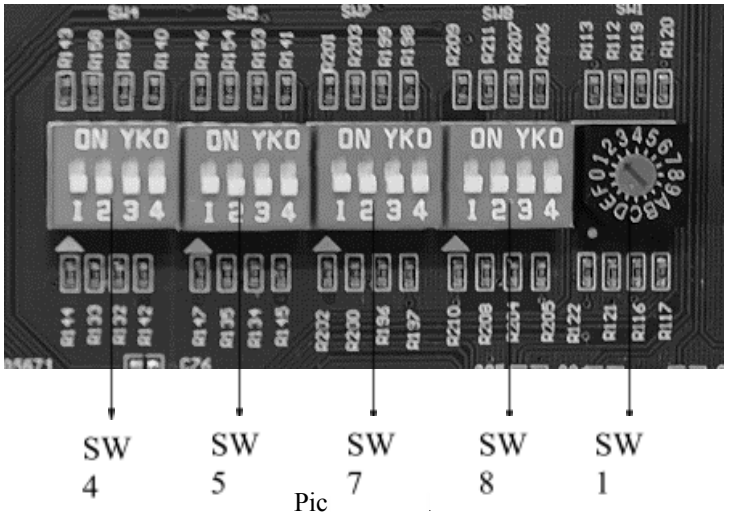

Pic

The functions of switches a lo

Table 3-5-1

No.		tio			Function
1	2	Modb l r /s)			Modbus parity check
OFF	OFF	9600	OFF	OFF	No check
ON	OFF	4800	ON	OFF	Even parity check
OFF	ON	19200	OFF	ON	Odd parity check
ON	ON	9600	ON	ON	No check

Table 3-5-2

SW5		
No.	**State**	**Function**
1	OFF	Cooling and heating type unit
	ON	Heating only unit
2	OFF	WUI control
	ON	Thermostat control
3	OFF	Normal control (user mode)
	ON	Lab test mode (only for capacity test)
4	OFF	With domestic hot water
	ON	Without domestic hot water

Table 3-5-3

SW7				
1	**2**	**3**	**4**	**Brand**
OFF	OFF	OFF	ON	/

Table 3-5-4

SW8		
No.	**State**	**Function**
1	OFF	Modbus stop bit: 1 bit
	ON	Modbus stop bit: 2 bit
2	OFF	Reserved
	ON	Reserved
3	OFF	Reserved
	ON	Reserved
4	OFF	Refer to table 3-4-5
	ON	

Table 3-5-5

Modbus address			
SW8-4 OFF		**SW8-4 ON**	
SW1	**Address**	**SW1**	**Address**
0	32	0	16
1	1	1	17
2	2	2	18
3	3	3	19
4	4	4	20
5	5	5	21
6	6	6	22
7	7	7	23
8	8	8	24
9	9	9	25
A	10	A	26
B	11	B	27
C	12	C	28
D	13	D	29
E	14	E	30
F	15	F	31

3.6.Water pump

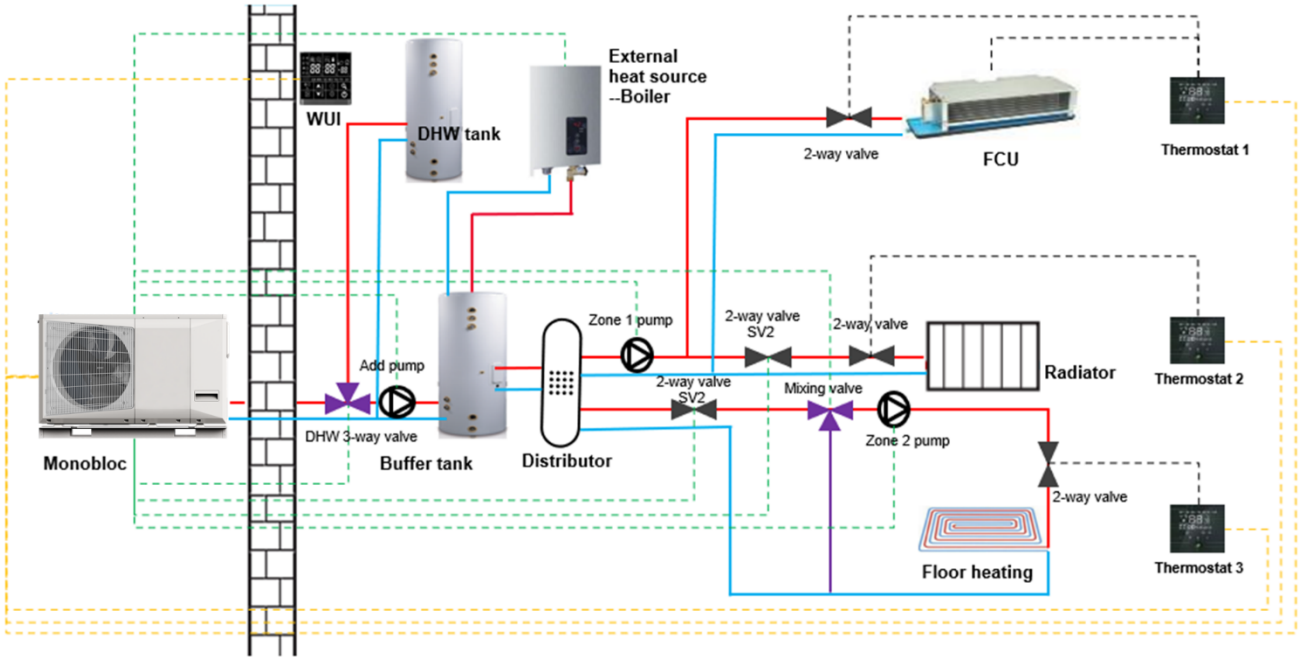

Picture 3-6-1

For the heat pump, it standard equips with hydraulic kit which is built-in a inverter water pump, and the unit also has 3 ports for external AC pump, all the of them definite as below:
Inverter pump: connect to the IDU PCB, supply the water circuit of heat pump;
P-o: Zone 1 water loop AC pump;
P-m: Additional main water loop booster AC pump, use to increase the pump head if the inv pump is not enough;
P-p: Zone 2 water loop AC pump, reserved.

a. Cooling mode:

When unit receive the cooling request:

- Inverter pump will start 30s later
- P-o pump, turn on once zone 1 has request, and turn off if zone 1 no request
- P-m pump, start 30s later, and keep running
- P-p pump, Bi-zone water loop pump: Reserved

b. Heating mode:

When unit receive the heating mode request:

- Inverter pump will start 30s later
- P-o pump, turn on once zone 1 has request, and turn off is zone 1 no request
- P-m pump, start 30s later, and keep running
- P-p pump, Bi-zone water loop pump: Reserved

c. DHW mode:

When unit receive the DHW request:

- Inverter pump will start 30s later
- P-o pump, turn on once zone 1 has request, and turn off is zone 1 no request
- P-m pump, start 30s later, and keep running
- P-p pump, Bi-zone water loop pump: Reserved

d. Standby mode:

When unit is standby: (reach the setting temp.)

i. Cooing mode standby:

- Inverter pump keep run with speed 1
- P-o pump, turn on once zone 1 has request, and turn off is zone 1 no request

- P-m pump, keep running
- P-p pump, Bi-zone water loop pump: Reserved

ii. Heating mode standby:

- Inverter pump keep run with speed 1
- P-o pump, turn on once zone 1 has request, and turn off is zone 1 no request
- P-m pump, keep running
- P-p pump, Bi-zone water loop pump: Reserved

iii. DHW mode standby:

- Inverter pump delay 120s to turn off
- Unit will turn to cooling/heating mode, pump action will operate according to cooling/heating mode

e. OFF mode:

When unit is off:

- Delay 120s to turn off all the pumps

f. Anti-frozen:

- Inverter pump always keeps running.
- Except the cooling mode, main water loop pump, P-o pump keeps running.

g. Inverter pump speed control logic:

- While the water flow rate＜0.9m^3/h, inverter pump speed must increase.
- Inverter water pump has two control type as below:
  - **Fixed pump speed**

It can fix the pump speed to a certain ratio (0-100%), after set the parameter (refer to IOM of wired controller), inv pump will always keep this speed unless reset its value.

  - **Delta T control**

Inverter pump has 30-100% rate speed, default speed 100% (max. speed) to start, and keep for 300s , then adjust the speed according to below pic.:

Here: △=(Tw-o)-(Tw-i)

If Tw-o is failed, then Tw-o=T1;

If Tw-i is failed, then the pump speed will always keep at 100% speed.

The pump speed will change according to the delta T basing on below table:

Speed change	Increase	Decrease
+1/5S	ΔT+3.5	…
+1/20S	ΔT+2.5	ΔT+2
+1/60S	ΔT+1.5	ΔT+1
Keep current speed	ΔT+0.5	ΔT
-1/60S	ΔT-0.5	ΔT-1
-1/20S	ΔT-1.5	ΔT-2
-1/5S	…	ΔT-3

3.7.User interface

This WUI (wall-mounted user interface) is used to control the operation of unit and configuration of the system. It can also be used to check the system running parameter and display the status of system via the LCD screen.

The WUI communicates with the IDU (Indoor unit) board with certain protocol, and detect the communication status at real time. IDU board will give communication fault alarm once it loses communication. But it will not give alarm if you did not connect the WUI to the IDU board when power on the system. So please note that if the WUI is not necessary, please do not connect it before power on the system.

The WUI will off its screen for energy saving without pressing for 35s (except the technical parameter configuration), and will wake up once you press any button.

Picture 3-7-1

Application of WUI:

1 Power supply: Take power supply from IDU board (12V power supply);
2 Working temperature range: -30℃~50℃;
3 Working humidity range: RH10%~95%

WUI can be installed inside your home or on the unit for split unit.
This manual provides guidelines on how to use this interface effectively.
If you have any questions regarding the display and its configuration, please contact your installer for more information.

Caution:

- It can not press the button of WUI within power on for 5s.

a. Button Overview

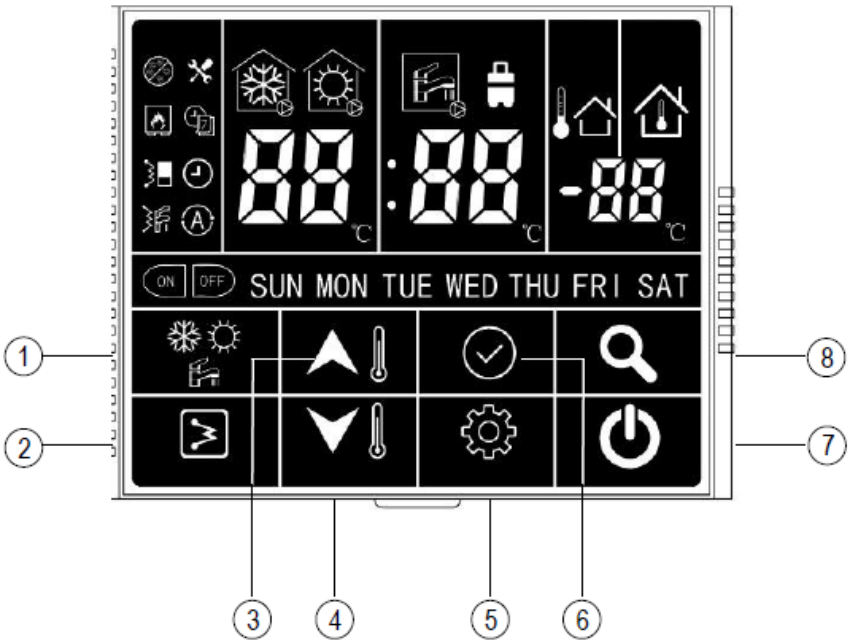

Definition	Description
1 Mode button	Used to change the running mode
2 Electric heater button	Used to manual on/off the DHW EHs manually
3 Up button	Used to change the value of parameter or turn page during system configuration or commissioning
4 Down button	Used to change the value of parameter or turn page during system configuration or commissioning
5 Setting button	Used to set user parameter configuration or technical parameter configuration
6 Confirm button	Used to confirm the current setting
7 ON/OFF button	Used to turn on/off the unit
8 Query button	Used to query the operation parameter or configuration parameter

b. Overview of Icons

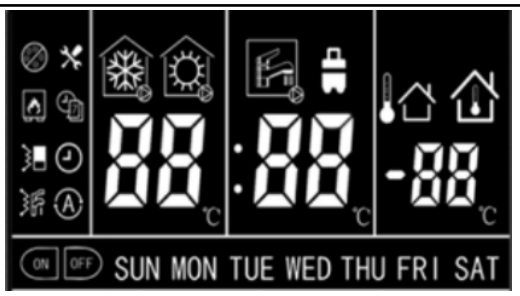

	Non-operating cooling mode		Non-operating heating mode		Non-operating DHW mode
	Operating cooling mode		Operating heating mode		Operating DHW mode
	Anti-frozen protection		Main water loop EHs		DHW EHs
	External heat source (boiler)		Weekly timer		Clock
ON	Timer on	OFF	Timer off		Alarm
	Air purge mode		OTA (water setpoint control)		IAT (air setpoint control)
LED display (Left)	LWT/time display (hour)/alarm	LED display (Middle)	DHW temp./time display (minute)	LED display (Right)	IAT/OAT (OAT is reserved)
SUN MON TUE WED THU FRI SAT	Days of week		Constant light: Eco mode Flash: Away mode		Always light: It can not achieve Anti-legionella setting point

Note:

1. The home screen display may vary depending on unit configuration and screen setting.
2. If anti-legionella can not achieve setting point, it needs to repower to reset.

c. Button introduction

This WUI has 8 buttons for the setpoint control, configuration, parameter check, etc. Detail of each button is as below table:

ON/OFF	• Press this button to turn on and turn off the unit.
Confirm	• Press this button to confirm the setting to exit interface of parameter setting or query.
Mode	• Press this button to change the mode: cooling-heating-cooling. • Press and hold this button to active the anti-legionella mode manually.
Query	• Press this button to check the configuration and running parameters. • Refer to the section 3, parameter and status check for details.
EHs	• While operating heating mode, press this button to activate/deactivate the main water loop EHs manually. • While operating the DHW mode, press this button to activate/deactivate the DHW EHs manually. • Press and hold this button to start the force-defrosting, and WUI will display “dF” for 5s.
Up Down	1 Temperature setting • While in standby mode, first time press this button to change the setting value of LWT, press the confirm button or wait for 5s without pressing any button to DHW temperature setting. • While operating cooling/heating mode, first time press this button to change the setting value of LWT, press the confirm button or wait for 5s without pressing any button to DHW temperature setting. • While operating DHW mode, first time press this button to change the setting temperature of DHW, press the confirm button or wait for 5s without pressing any button to setting value of LWT. 2 Time correction and timer setting • Refer to details of configuration.
Setting	• User parameter configuration, please refer to configuration section. • Technical parameter configuration, please refer to configuration section.

d. Configuration

This WUI can be used to configurate the system setting during the installation and operation. Here enclosed two configuration sections: user parameter configuration and technical parameter configuration, please check the details as below.

i. User parameter configuration

Press the “setting” button to go into the user parameter configuration interface, and press this button to page down the setting item from 0-9 as circuit. Used the “up” or “down” button to change the value of each item.

Details of the user parameter configuration table is as below: (The No. in below table will be displayed in the left LED tube except “0”)

No.	Item	Description
0	Clock setting	1 Press the “setting” button, then press “confirm” button to enter day setting, then press “up” or “down” button to change the day if necessary; 2 After day stetting, press the “confirm” button to enter hour setting, press “up” or “down” button to set the correct time in hour; 3 After hour stetting, press the “confirm” button to enter minute setting, press “up” or “down” button to set the correct time in minute; 4 Press “confirm” button to confirm and exit clock setting. You can also press “setting” button to go to next parameter.
1	Schedule of DHW	1 Press and hold the “confirm” button, the icon “on” will be flashing, then press the “confirm” button to confirm, the icon “on” will be constant lighting; 2 Press and hold the “down” button to enter day setting, then press “up” or “down” button to select the day, press the “confirm” button to confirm day setting, after that, the icon of that day will be constant lighting; 3 Press and hold the “down” button to enter hour setting, then press “up” or “down” button to select the time in hour, press the “confirm” button to confirm; 4 Press and hold “down” button to enter minute setting, then press “up” or “down” button to select the time in minute, press the “confirm” button to confirm; 5 Press and hold “down” button to set the timer off, then press the “down” button to enter hour setting, then press “up” or “down” button to select the time in hour, press the “confirm” button to confirm; 6 Press and hold “down” button to enter minute setting, then press “up” or “down” button to select the time in minute, press the “confirm” button to confirm; 7 Press and hold “confirm” button to confirm and exit user setting. You can also press “setting” button to go to next item.
2	Power memory setting	This is used to record the setting once power is shutdown, and system will recovery the previous status once power come back 1 Press “up” or “down” button to set the value; 0- Without power memory; 1- With power memory (default)
3	WIFI statue	Reserved
4	Air purge setting	1 Press the “up” or “down” button to set the value; 0- Not start air purge mode 1- Start air purge mode If choose 0, then press the “setting” button to go to next item; If choose 1, then press the “confirm” button to exit the setting and unit will start the air purge mode; during the air purge mode, WUI

		will be displayed “PA”, and only the “ON/OFF” button are valid to exit this mode.
5	Occupancy mode setting	1 Press “up” or “down” button to set the value; 2 Then press “confirm” button to confirm and exit user setting or you can also press “setting” button to go to next item. 0- Home 1- Eco 2- Away
6	Night mode setting	This is used to setting the night mode for low noise during night-time. Press “up” or “down” button to set the value; 0- Without night mode 1- With night mode If choose 0, press “confirm” button to confirm and exit user setting or you can also press “setting” button to go to next item; If choose 1, then follow as below: 1 Press “confirm” button to set the start timer setting, then press “up” or “down” button to set time in hour; 2 Press “confirm” button to enter minute setting, then press “up” or “down” button to set time in minute; 3 Press the “confirm” button to enter the stop timer setting, then press “up” or “down” button to set time in hour; 4 Press “confirm” button to enter minute setting, then press “up” or “down” button to set time in minute; 5 Then press “confirm” button to confirm and exit user setting or you can also press “setting” button to go to next item.
7	Anti-legionella temperature setting	Press the “up” or “down” button to set the value; Temperature range: 60-70℃, default as 60℃.
8	Anti-legionella timer start	1 Press and hold “confirm” button to enter day setting, press “down” button to set the day, then press the “confirm” button to confirm, after that, the icon of the day will be constant lighting; 2 Press and hold the “down” button to enter hour setting, then press “up” or “down” button to select the time in hour, press the “confirm” button to confirm; 3 Press and hold “down” button to enter minute setting, then press “up” or “down” button to select the time in minute, press the “confirm” button to confirm; 4 Press and hold “confirm” button to confirm and exit user setting or you can also press “setting” button to go to next item.
9	Lock of WUI	Used to lock the button of WUI in order to child touch for mistake; double press the “setting” button to unlock. 1 Press the “up” or “down” button to set the value; 2 Then press “confirm” button to confirm and exit user setting or you can also press “setting” button to go to next item. 0- Without lock 1- With lock

ii. Technical parameter configuration

Press and hold the “setting” button to go into the technical parameter configuration interface, and press “setting” button to turn down the setting item from 0-22. You can use “up” or “down” button to change the value of each item.

Details of the user parameter configuration table as below:

No.	Item	Description
0	Control setpoint type	0- Water setpoint control 1- Air setpoint control
1	Controller selection	0- WUI (Wired controller) 1- Dry contact
2	Back up function	0- Main water loop EHs + DHW EHs + boiler 1- Main water loop EHs + DHW EHs 2- DHW EHs + boiler 3- Main water loop EHs + boiler 4- DHW EHs only 5- Boiler only 6- Main water loop EHs only 7- Non back up
3	Climate curve selection	0- Non climate curve 1- Climate curve After set the 1 with climate curve, please follow the below steps: 1 After choose 1, enter heating climate setting, press “up” or “down” button to choose the climate curve 1-13, if choose 1-12, press “confirm” button, then go to step ③; if choose 13, press “confirm” button, then go to step ②; 2 Customized heating curve value input: • Press “up” or “down” to set the value of MinOAT; • Then press “confirm” button to set MaxOAT, press “up” or “down” to set the value of MaxOAT; • Then press “confirm” button to set MinWSP, press “up” or “down” to set the value of MinWSP; • Then press “confirm” button to set MaxWSP, press “up” or “down” to set the value of MaxWSP; • Press the “confirm” button to step ③; 3 Press “up” or “down” button to set the heating climate offset from -5~5℃, default as 0℃; then press “confirm” button to go to step ④; 4 Enter cooling climate setting, press “up” or “down” button to choose the climate curve 1-3, if choose 1-2, press “confirm” button, then go to step ⑥; if choose 3, press “confirm” button to go to step ⑤; 5 Customized heating curve value input: • Press “up” or “down” to set the value of MinOAT; • Then press “confirm” button to set MaxOAT, press “up” or “down” to set the value of MaxOAT; • Then press “confirm” button to set MinWSP, press “up” or “down” to set the value of MinWSP; • Then press “confirm” button to set MaxWSP, press “up” or “down” to set the value of MaxWSP; • Press the “confirm” button to go to step ⑥; 6 Press the “up” or “down” button to set the heating climate offset from -5~5℃, default as 0℃; then press “confirm” button to confirm and exit or “setting” button to go to next item
4	Capacity test setting	Reserved
5	3-way valve type select	0- Normal open 1- Normal closed
6	DI5	0- Disable 1- Power limitation (night mode) 2- Load-shed 3- DHW request 4- Anti-legionella request
7	DI6	

8	DI7	5- DHW priority
9	DI8	
10	DO5	0- Disable 1- Unit in alarm 2- Unit in standby 3- Unit running 4- Unit in cooling 5- Unit in heating 6- Unit in DHW 7- Unit in defrost 8- Unit controlled by Modbus
11	DO7	
12	DO8	
13	Eco mode cooling setpoint offset	If choose air setpoint, it is air setpoint offset, otherwise is water setpoint offset 0~10℃, default as 2℃
14	Away mode cooling setpoint offset	If choose air setpoint, it is air setpoint offset, otherwise is water setpoint offset 0~10℃, default as 4℃
15	Eco mode heating setpoint offset	If choose air setpoint, it is air setpoint offset, otherwise is water setpoint offset -20~0℃, default as -2℃
16	Away mode heating setpoint offset	If choose air setpoint, it is air setpoint offset, otherwise is water setpoint offset -20~0℃, default as -4℃
17	Eco mode DHW setpoint offset	-10~0℃, default as -5℃
18	Minimum OAT for heating	-26~10℃, default as -26℃
19	Booster OAT Threshold	-10~0℃, default as -5℃
20	Heat pump warmup time	0~120min, default 60min
21	Booster Delta temperature	1~20℃, default 10℃
22	Second zone setting	0 – No bi-zone function 1- Bi-zone function for heating mode only 2- Bi zone function for both cooling and heating mode
23	Water pump ΔT control setting	ΔT default as 5℃, can be adjust from 3.5℃~8℃, with precision 0.5℃
24	Water pump control type setting	0- ΔT control 1- Force to on Force to off
25	Water pump speed setting	It is only available when “item 24” set to 1- force to on, then set the speed from 1%~100% speed. 0 - 1% speed 1 - 2% speed

	…
	99 - 100% speed

Note:
DI: Customized input, dry contact;
DO: Customized output, 230V contact;
All the setting will only be changed by reset, never be cleaned by repower.

3.8.Operating parameter

a. General presentation

For the running parameter checking, here are two devices to check the value: one is the user interface and the other is the IDU PCB digital tube.

b. Parameter checking from user interface

Press the “query” button to go into the parameter query interface, and press “confirm” button or without pressing any button for more than 10s to exit the parameter query interface.

After going into query interface, press “up” or “down” button to check the parameters or status as follow table:

: Query button;

: Confirm button

: Up button

: Down button

Picture 3-8-1

Table 3-8-1

No.	Definition	Description
1	Setting temp.: Ts1	Display Ts1 during standby/cool/heat mode
2	Setting temp.: Ts2	Display Ts2 during DHW mode
3	Setting temp.: Ts3	Display Ts3 when it chooses the air setpoint control
4	Capacity of unit	HP*10, example: 10 means that unit is 1HP capacity
5	Target frequency	
6	Running frequency	
7	Water flow rate	m^3/h, feedback from inverter water pump
8	Capacity output	=1.163* (water flow rate) * [Tw_out – Tw_in] (kW)
9	T3 value	ODU coil temp.
10	T4 value	OAT
11	TP value	Discharged temp.
12	T7 value	Temp. of refrigerant for PCB cool
13	EVX opening degree	Actually value
14	ODU fan motor speed	
15	AC current	
16	AC voltage	
17	IPM temp. (T9)	Compressor module temp.

18	Limitation reason of compressor frequency	0: no limitation; 1: T3B temp. limitation (reserved); 2: OAT limitation; 4: Discharged temp. limitation; 8: Voltage limitation 16: Current limitation 32: IPM temp' limitation 64: Night mode limitation 128: LWT limitation If occur multi limitation, display value=sum of all limitation value
19	Limitation reason of compressor frequency	0: no limitation; 1: Limitation of different value between EWT&LWT
20	Tw_ in value	EWT
21	Tw_ out value	LWT of BPHE
22	T1 value	LWT of unit (after the EHs inside the unit)
23	T6 value	IAT, the sensor built inside the wired controller
24	T5 value	DHW value
25	Tw-2 value	Second zone EWT value when set this function (reserved)
26	T1B value	External heat source (boiler) LWT value
27	Capacity demand	
28	Inv. Pump speed	
29	Last alarm	
30	Penult alarm	
31	Antepenultimate alarm	
32	Current protection	P0-P3: check the detail in alarm table
33	Detail of P6 alarm in function board	L-: no alarm; L0: IPM or IGBT over current; L1: lack of phase L2: Compressor losing speed fault; L3: DC voltage is too low to protect L4: Fan motor over current protection L5: Fan motor lack of phase; L6: Fan motor zero speed fault L7: PFC fault L8: DC voltage is too high to protect L9: Compressor zero speed fault LA: PWM synchronization fault Lb: MCE fault Lc: Compressor over current protection Ld: EEPROM data is wrong LE: Compressor fail to start; LF: fan motor losing speed fault
34	SV2 statue of water loop	2-way valve which is used to change the cool/heat water between fan coil and radiator (OFF-0; ON-1)
35	SV3 statue of water loop	DHW 3-way valve
36	Main water loop EHs statue	Standard equip with one EH, another two are field supply (OFF-0; ON-1)
37	DHW EHs	OFF-0; ON-1

38	External heat source statue	OFF-0; ON-1
39	P_o	External main water loop pump (OFF-0; ON-1)
40	P_p	Second zone water loop pump (OFF-0; ON-1)
41	P_m	External heat source water loop pump (OFF-0; ON-1)
42	Anti-frozen heater statue	OFF-0; ON-1
43	Chassis heater statue	OFF-0; ON-1
44	Crank heater statue	OFF-0; ON-1
45	SV2 statue of refrigerant system	Liquid spray cool value (OFF-0; ON-1)

c. Parameter checking from IDU PCB

Press “up” or “down” button to check the parameters or status as follow table:

: Up button

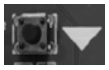 : Down button

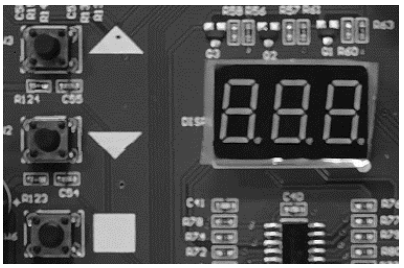

Picture 3-8-2

Table 3-8-2

No.	Definition	Description
0	Frequency/QTY of IDU	Display the qty of IDU while standby/display frequency while running
1	The capacity of unit	
2	Capacity demand of IDU	
3	Capacity demand after ODU amending	
4	Running mode	0-OFF; 2-cooling; 3-heating; 4-force heating
5	Actual output of ODU	
6	Fan speed	0-8
7	Tw-in value	EWT of BPHE
8	Tw-out value	LWT of BPHE
9	T1 value	LWT of unit after electrical heater
10	T3 value	ODU condenser temperature
11	T4 value	ODU ambient temperature
12	TP value	Discharged temperature
13	EVX opening degree	Actually value = display value * 4
14	T7 value	Temperature of refrigerant cooling pipe
15	AC current	
16	DC current	
17	AC voltage	
18	DC voltage	
19	Last error	It will display “---" if no error had occurred

20	Limitation reason of compressor frequency	0: no limitation; 1: T3B temp. limitation (reserved); 2: OAT limitation; 4: Discharged temp. limitation; 8: Voltage limitation 16: Current limitation 32: IPM temp' limitation 64: Night mode limitation 128: LWT limitation If occur multi limitations, display value=sum of all limitation value
21	Version of ODU software	
22	Version of EPPROM	
23	Detail of P6 alarm in function board	L0: IPM board fault; L1: DC voltage over-low protection L2: DC voltage over-high protection; L4: MCE fault/ PWM synchronization/cycle loop L5: Zero speed fault; L7: Phase sequence fault L8: Frequency change ＞15Hz compare to last moment protection L9: Frequency between setting value and actual running value＞15Hz protection
24	T9 value	IPM board temperature
25	T30	Target T3 value for defrost control
26	Limitation reason of compressor frequency	0- no limitation; 1- limitation due to huge different value between EWT&LWT
27	Target discharged temperature	
28	ODU CRCH	Hex.
29	ODU CRCL	Hex.
30	IDU CRCH	Hex.
31	IDU CRCL	Hex.
32	Modbus baud rate	
33	Modbus parity check	0-non; 1-odd parity check; 2-even parity check
34	Modbus ID	1-255
35	Last 1st error	
36	Last 2nd error	
37	Last 3rd error	
38	Last 4th error	
39	Last 5th error	
40	Last 6th error	
41	Last 7th error	
42	Last 8th error	
43	Last 9th error	
44	Lat 10th error	
45	T2B refrigerant sensor temp.	The refrigerant pipe temp. of BPHE

3.9.Error code table

a. General presentation

For the error, here are two display devices: one is the user interface and the other is the IDU PCB digital tube. It must pay attention to the error where it is displayed to get the correct meaning of the problem.

b. Error code list of user interface

Table 3-9-1

Alarm code	Description
E0	Water flow switch fault
E1	Communication fault between IDU board and ODU board
E2	LWT of unit sensor (T1 sensor) fault
E3	Gas refrigerant temp sensor (T2 sensor) fault (reserved)
E4	Liquid refrigerant temp sensor (T2B sensor) fault (reserved)
E5	ODU (module part) alarm
E6	DHW sensor (T7 sensor) fault
E7	EWT sensor (Tw in sensor) fault
E8	LWT of BPHE sensor (Tw_out sensor) fault
E9	Communication fault between WUI and function board
EA	Second zone LWT sensor (Tw_2 sensor) fault (Only valid after setting second zone function, reserved)
Eb	External heat source LWT sensor (T1B sensor) fault (Only valid after set the external heat source – boiler)
Ec	Water pump fault
Ed	Reserved
EE	Reserved
EF	Mode conflict (reserved)
P0	EEPROM fault
P1	Protection of huge different values between EWT and LWT
P2	Protection of lack of water
P3	Protection of abnormal different value between EWT and LWT
P6	Over-heat protection of standard electrical heater

Note:
1. When it is displayed the E5-ODU alarm, that needs to check the alarm on the IDU PCB for more detail.
2. P0-P3 will only be displayed after it occurs 3 times in 1h, and can't resume unless repower the system.
3. Detail troubleshooting refer to the service manual.

c. Error code list of IDU PCB

Table 3-9-2

Alarm code	Description
E1	Phase sequence fault
E2	Communication fault between IDU PCB and ODU PCB
E4	T4 ambient temperature sensor fault
E6	T3 ODU condenser temperature sensor fault
E8	TP discharged temperature sensor fault
E9	Power supply voltage over-high/over-low protection
E10	EPPROM fault
Ec	T7 refrigerant cooling pipe temperature sensor fault
H0	Communication fault between main chip of ODU PCB and module chip of ODU PCB
H4	3 times P6 error in 30mins
H5	3 times P2 error in 30mins
H6	3 times P4 error in 100mins
H7	IDU quantity decrease alarm (reserved)
H9	2 times P9 error in 10mins
H10	3 times P3 error in 60mins
H11	2 times P13 error in 10mins (reserved)
H12	3 times Pb error in 60mins
P1	High pressure protection
P2	Low pressure protection
P3	Over current protection
P4	Over-heat protection of discharged temperature
P5	Condenser over-heat protection
P6	IPM board protection
P9	DC motor protection
P10	Anti-typhoon protection (reserved)
P11	T2B refrigerant temperature of HPHE over-low protection
Pb	IPM temperature over-heat protection

Note:
The error H4-H12 must repower to resume.
Detail troubleshooting refer to the service manual.